THIS DOCUMENT IS THE PROPERTY OF WANG LABORATORIES, INC. AND SHALL NOT BE REPRODUCED OR COPIED, OR USED AS A BASIS FOR THE MANUFACTURE OR SALE OF APPARATUS OR DEVICES WITHOUT PERMISSION.

| LOCATION | TYPE | WANGLAB. No. | QTY |
|---|---|---|---|
| Q1 | 40250VR | 375-1028 | 1 |
| Q2 | GT544 | 375-1017 | 1 |
| Q3 * | 40251 | 375-1008 | 1 |
| Q4 | 2N6246 | 375-0029 | 1 |
| D1 | 1N4742 | 380-2121 | 2 |
| D2 | 1N749A | 380-2042 | 1 |
| L1,2 | 723 | 376-0066 | 2 |
| D3 | SIL DIODE | 380-1001 | 1 |
| Q5 | 35224 | 375-1001 | 1 |

NOTE:
1. ALL RESISTORS ARE 1/4 W UNLESS SPECIFIED OTHERWISE.

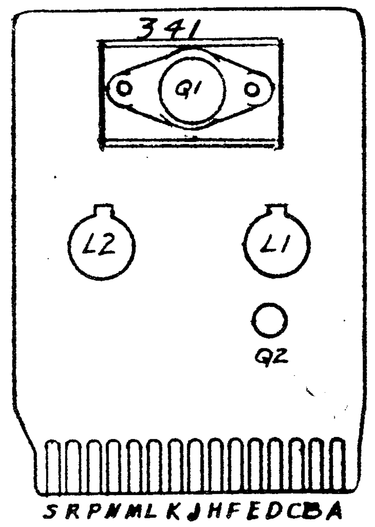


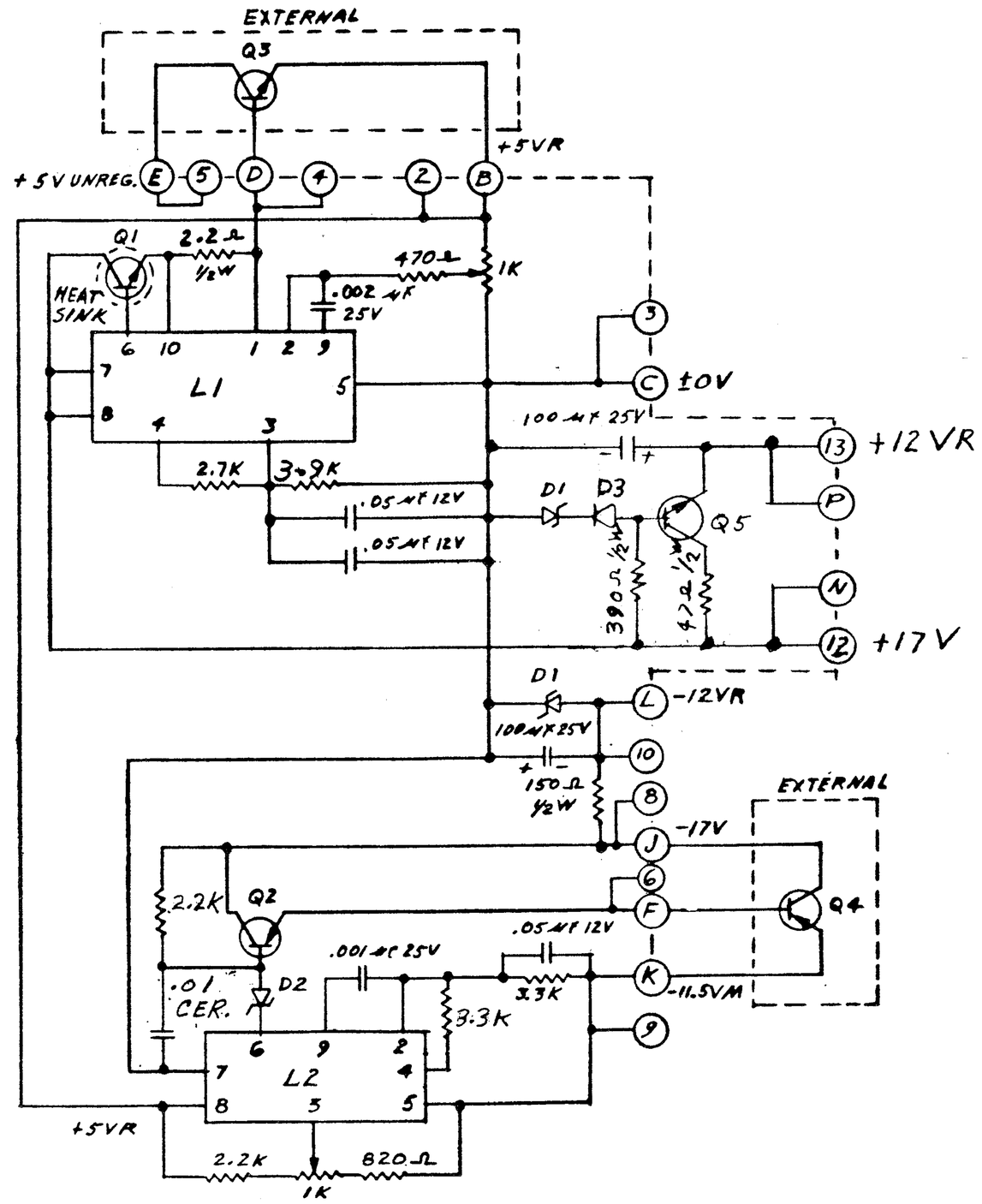


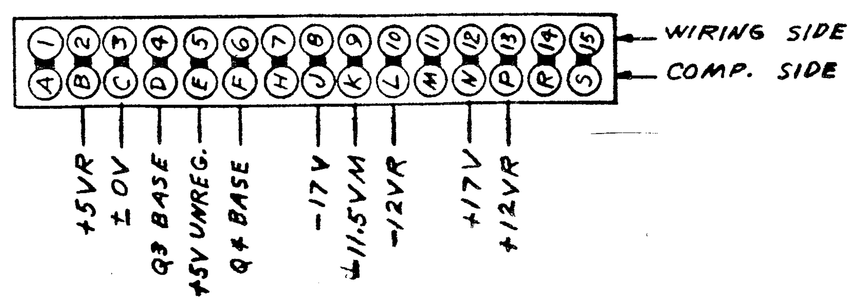


| REV | BY | DATE | REVISIONS |
|---|---|---|---|
| 1 | [illegible] | 12/17/71 | PER ECN 2625 Q1 WAS 40250 APP: SKH |
| 2 | [illegible] | 1-25-72 | PER ECN 2726 Q4 WAS 2N1540 APP: SKH |
| 3 | [illegible] | 3-17-72 | PER ECN 2835 RESISTOR AT L1-3 WAS 4.7K APP. SKH |
| 4 | [illegible] | 8-23-72 | PER ECN 3161 ADDED REG. CIRCUIT TO +12V APP'D SKH |
| 5 | [illegible] | 3-16-73 | REVISED PER ECN # 3563 APP'D SKH |
| 6 | [illegible] | 3-16-73 | REVISED PER ECN # 3673 APP: D SKH |

TOL. EX. AS NOTED .XX ±.010 .XXX ±.005 FRAC. ±1/ ANG. ±

MATERIAL

FINISH

SCALE

WANG LABORATORIES INC.
TEWKSBURY, MASS.

MODEL NO. 500/520 600

DRAWN [illegible] 1/14/71 APP. S.K.H.

CHECKED [illegible] 5/24/71 APP.

TITLE SCHEMATIC LOGIBLOC #341 POWER SUPPLY REGULATOR

W.O. NO.

DWG. NO. C 5999-1 REV 6

C5999 ON DWG

DO NOT SCALE

| HOLE LEGEND | | |
|---|---|---|
| DRILLED OR PUNCHED HOLE TOLERANCES: | HOLE DIA. | TOL |
| | 0135 to .125 | ± .003 ± .001 |
| | .126 to .250 | ± .004 ± .001 |
| | 251 to 500 | ± .005 ± .001 |

| IDENT. | DESCRIPTION | QTY. |
|---|---|---|
| A | | |

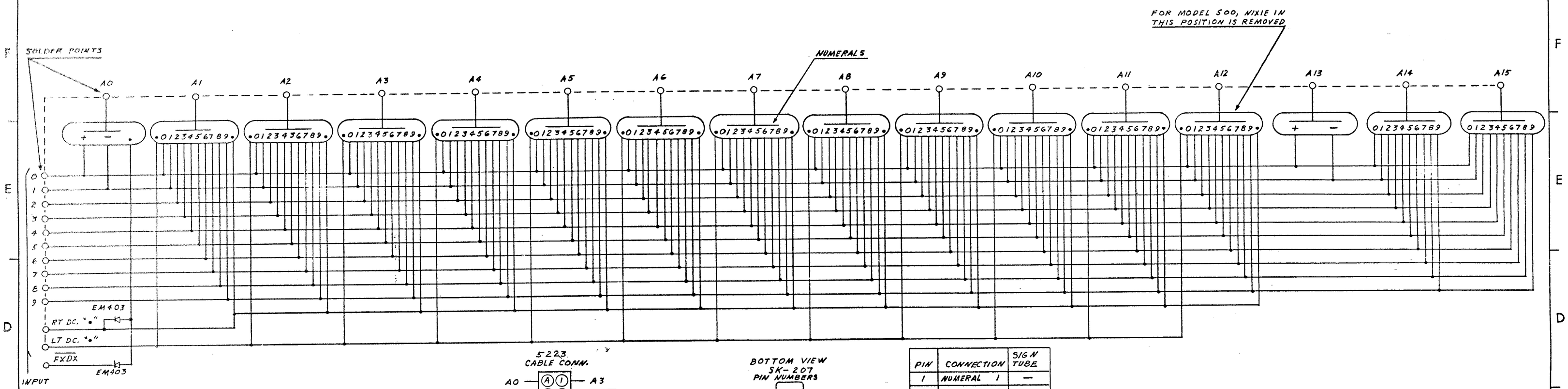


5223 CABLE CONN.

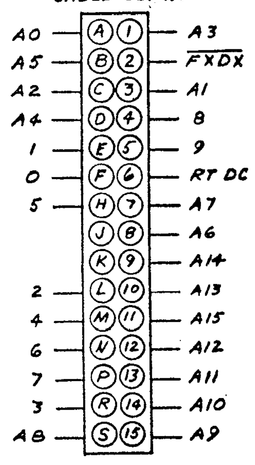


BOTTOM VIEW
SK-207
PIN NUMBERS

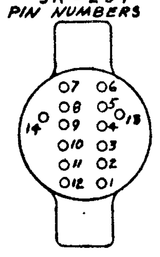


| PIN | CONNECTION | SIGN TUBE |
|---|---|---|
| 1 | NUMERAL 1 | — |
| 2 | " 2 | |
| 3 | " 3 | |
| 4 | " 4 | |
| 5 | " 5 | |
| 6 | " 6 | + |
| 7 | ANODE | ANODE |
| 8 | NUMERAL 7 | |
| 9 | " 8 | |
| 10 | ANODE | |
| 11 | NUMERAL 9 | |
| 12 | " 0 | |
| 13 | R.T. DC. PT. | R.T. DC. PT. |
| 14 | L.F. DC. PT | |

| TUBE TYPE | WANG. NO. | QTY |
|---|---|---|
| SIGN | 340-0010 | 2 |
| NUMERAL | 340-0011 | 14 |

| NO. | REVISION | DATE | BY |
|---|---|---|---|
| 1 | PER ECN # 21149 ADDED FXDX CKT. ADDED 5223 CABLE CONN. NOTE FOR MODEL 500 RT AFP. | 5/14/71 | RB |

| WANG PART NO. | ITEM | QTY. | NAME | MATERIAL | DESCRIPTION |
|---|---|---|---|---|---|
| Qty. Per Unit / FIRST USED ON / ASSY USED ON | | | WANG LABORATORIES, INC. TEWKSBURY, MASS. U.S.A. | | |

| | BY | DATE | APPROVED BY | DATE |
|---|---|---|---|---|
| DWN | RB | 2/21/70 | E ENGR | SKH 3/21/70 |
| CHK | RJT | 3-13-70 | M ENGR | |
| E. C. CONTROL | | | MFG ENGR | |

MATERIAL

MODEL NO. 700/500

SEE ENGRG SPECIFICATIONS No.

FINISH

TOL. EX. AS NOTED .XX ± .010 FRAC. ± 1/64 .XXX ± .005 ANG. ± 1°30' FINISH

SCALE FULL SHT OF

TITLE SCHEMATIC LOGIBLOC # 5936 NIXIE DISPLAY

| WANG PART NUMBER | SIZE | DRAWING NUMBER | REV. |
|---|---|---|---|
| | D | 5936-1 | 1 |

D 5936-1

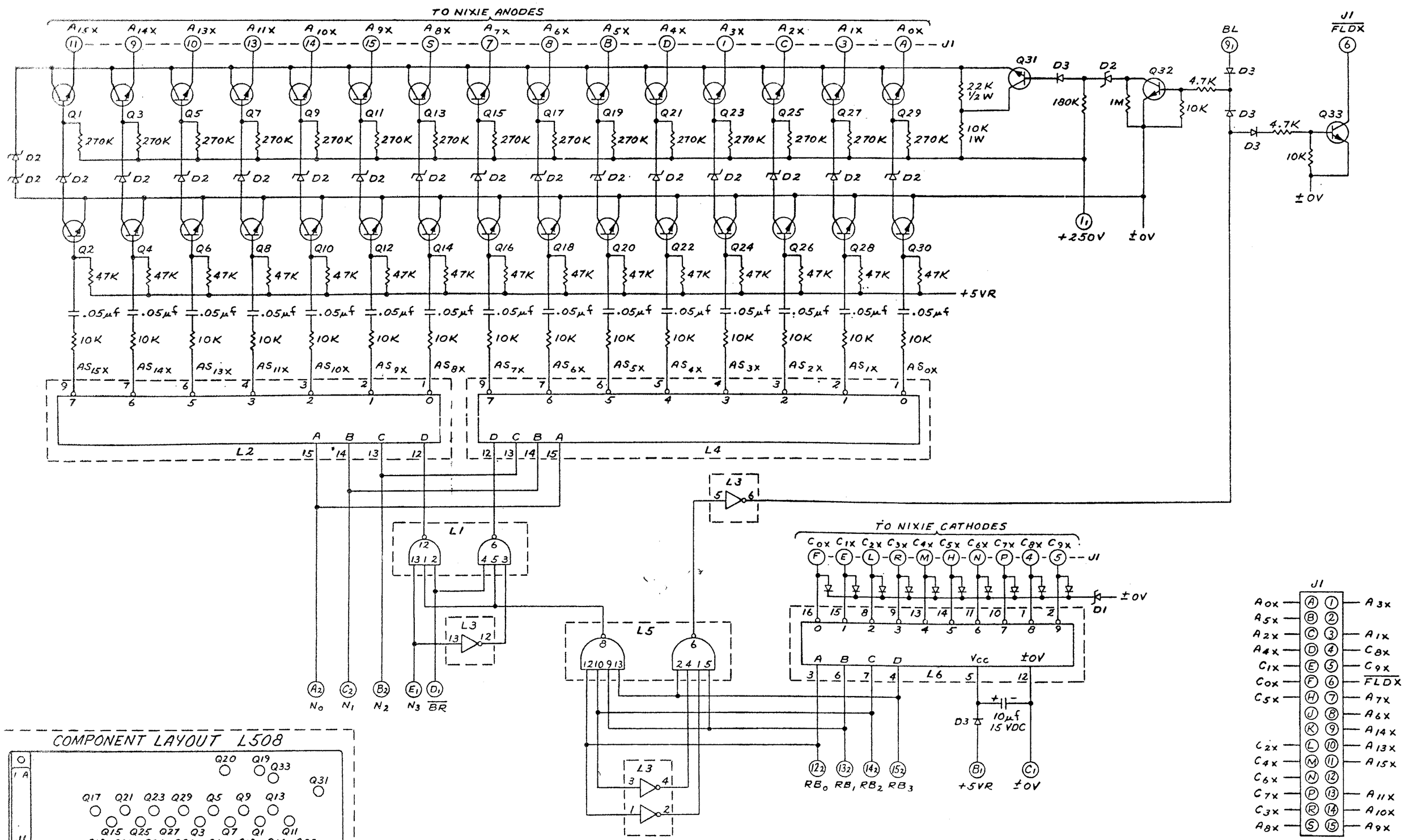


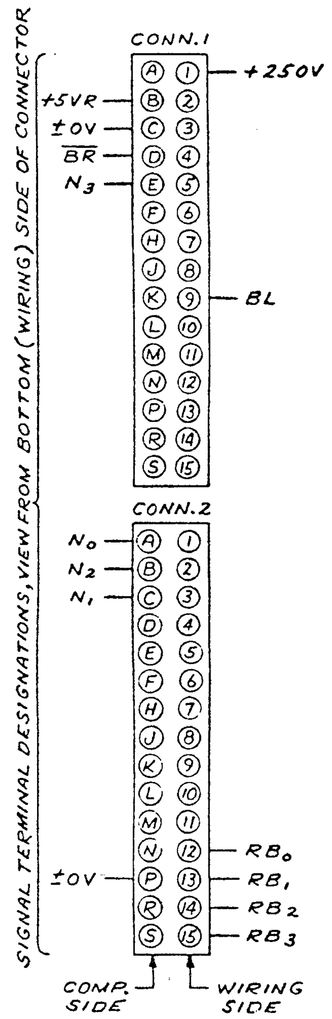


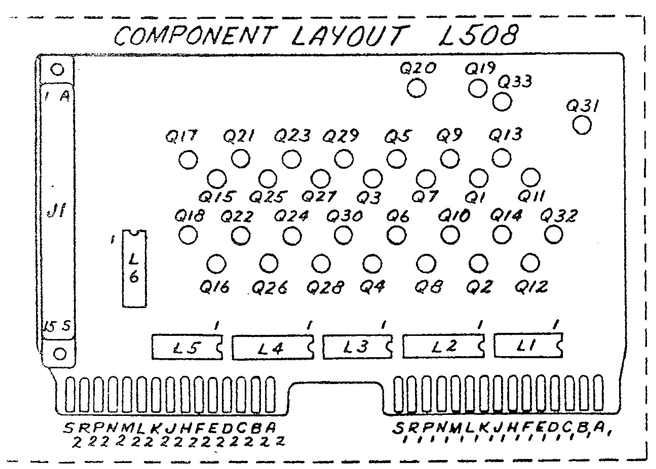


| I.C. LOCATION | TYPE | W.L. NO. | TERM FOR ±0V | TERM FOR VCC +5VR | QTY. |
|---|---|---|---|---|---|
| L3 | SN7404N | 376-0010 | 7 | 14 | 1 |
| L1 | SN7410N | 376-0003 | 7 | 14 | 1 |
| L5 | SN7420N | 376-0004 | 7 | 14 | 1 |
| L2,4 | SN7442N | 376-0008 | 8 | 16 | 2 |
| L6 | SN74141N | 376-0063 | 12 | 5 | 1 |

| COMPONENT | TYPE | W.L. NO. | QTY. |
|---|---|---|---|
| Q1 THRU Q33 | NIX DR SIL | 375-1006 | 33 |
| | | | |
| D1 | 60V ZENER | 380-2127 | 1 |
| D2 | 110V ZENER | 380-2125 | 18 |
| D3 | EM403 | 380-4000 | 15 |

NOTE:
ALL RESISTORS UNLESS OTHERWISE SPECIFIED ARE 1/4 W.

| NO. | REVISION | BY |
|---|---|---|
| 1 | REVISED PER E.C. # 2439 APPD. 3-XII-70 | F.S.S. |
| 2 | REVISED PER E.C. # 2476 APPD. 3-XII-70 | F.S.S. |

| IDENT | QTY | NAME | MATERIAL | DESCRIPTION |
|---|---|---|---|---|
| | | | DR F.S.S. | DATE 2-22-71 |
| | | | CHK | DATE 3/22/71 |
| | | | APPD K.H.D | DATE 5/25/71 |

TOL. EX. AS NOTED .XX ±.010 .XXX ±.005 FINISH

WANG LABORATORIES, INC.
TEWKSBURY, MASS. U. S. A.

MODEL No. 500 | W.O. No. | SCALE | SHEET OF

TITLE SCHEMATIC LOGIBLOC # L508
NIXIE SWITCH CONTROL

PART NUMBER | REV 2 | SIZE D | DRAWING NUMBER 5987-1

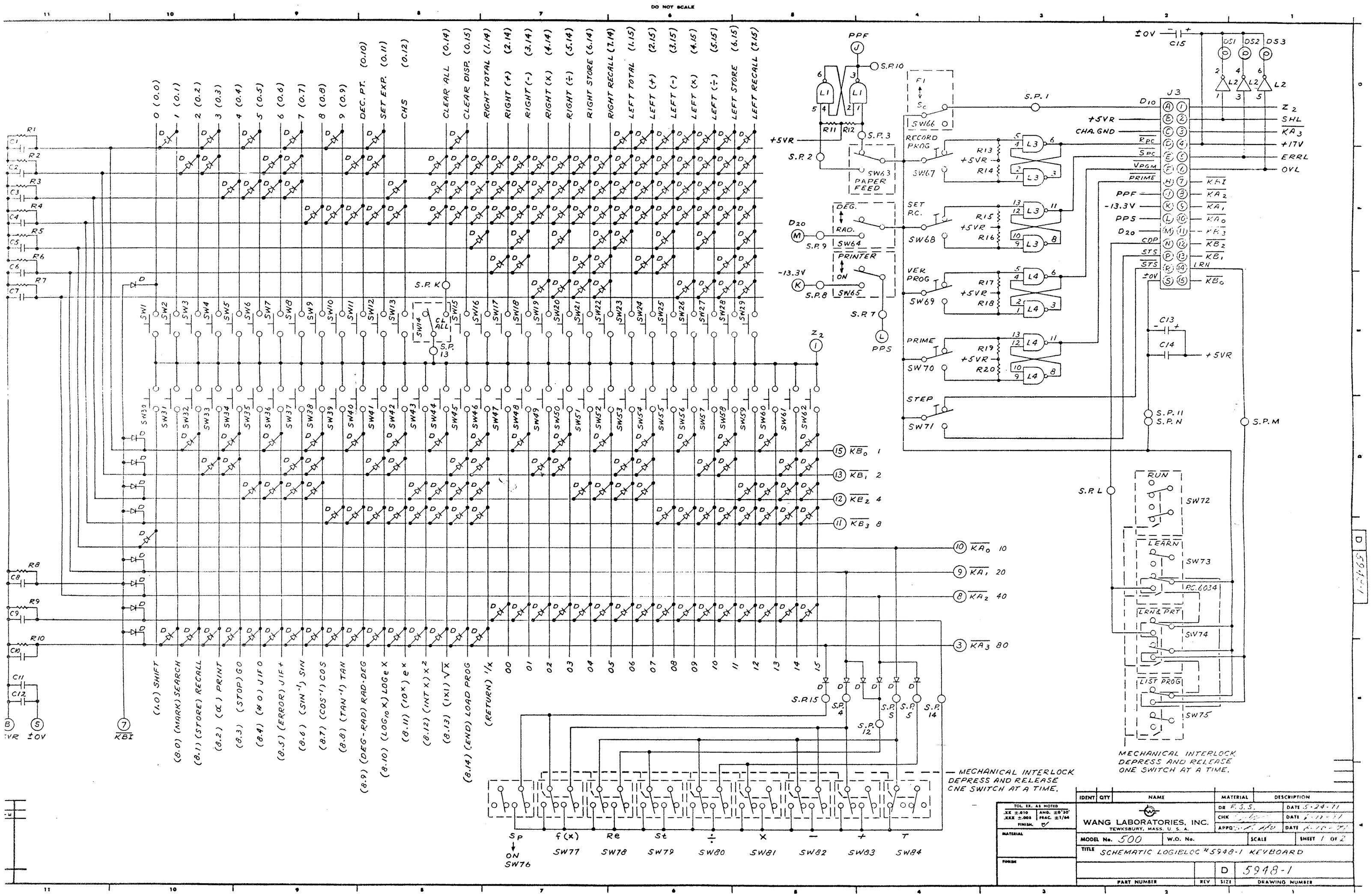
DO NOT SCALE
0 (0.0)
1 (0.1)
2 (0.2)
3 (0.3)
4 (0.4)
5 (0.5)
6 (0.6)
7 (0.7)
8 (0.8)
9 (0.9)
DEC. PT. (0.10)
SET EXP. (0.11)
CHS (0.12)
CLEAR ALL (0.14)
CLEAR DISP. (0.15)
RIGHT TOTAL (1.14)
RIGHT (+) (2.14)
RIGHT (-) (3.14)
RIGHT (x) (4.14)
RIGHT (÷) (5.14)
RIGHT STORE (6.14)
RIGHT RECALL (7.14)
LEFT TOTAL (1.15)
LEFT (+) (2.15)
LEFT (-) (3.15)
LEFT (x) (4.15)
LEFT (÷) (5.15)
LEFT STORE (6.15)
LEFT RECALL (7.15)
(1.0) SHIFT
(8.0) (MARK) SEARCH
(8.1) (STORE) RECALL
(8.2) (α) PRINT
(8.3) (STOP) GO
(8.4) (*0) JIF 0
(8.5) (ERROR) JIF +
(8.6) (SIN⁻¹) SIN
(8.7) (COS⁻¹) COS
(8.8) (TAN⁻¹) TAN
(8.9) (DEG-RAD) RAD-DEG
(8.10) (LOGe X) LOGe X
(8.11) (10ˣ) eˣ
(8.12) (INT X) X²
(8.13) (1/X) √X
(8.14) (END) LOAD PROG
(RETURN) 1/X
00 01 02 03 04 05 06 07 08 09 10 11 12 13 14 15
KB1
KB0 1
KB1 2
KB2 4
KB3 8
KA0 10
KA1 20
KA2 40
KA3 80
PPF
S.P. 10
S.P. 1
S.P. 2
S.P. 3
S.P. K
S.P. 9
S.P. 8
S.P. 7
S.P. 13
S.P. 11
S.P. N
S.P. M
S.P. L
S.P. 15
S.P. 4
S.P. 5
S.P. 12
S.P. 14
PPS
Z2
+5VR
CHA. GND
-13.3V
PPS
D20
COP
STS
IRN
KB0
KA1
KA2
KA3
+17V
ERRL
OVL
SHL
±0V
C15
C13
C14
DS1
DS2
DS3
J3
D10
SW66
RECORD PROG
SW67
SW63
PAPER FEED
DEG.
RAD.
SW64
PRINTER
ON
SW65
SET P.C.
SW68
VER PROG
SW69
PRIME
SW70
STEP
SW71
RUN
SW72
LEARN
SW73
RC 6034
LRN & PRT
SW74
LIST PROG
SW75
MECHANICAL INTERLOCK DEPRESS AND RELEASE ONE SWITCH AT A TIME.
Sp
ON
SW76
f(x)
SW77
Re
SW78
St
SW79
÷
SW80
×
SW81
−
SW82
+
SW83
T
SW84
WANG LABORATORIES, INC.
TEWKSBURY, MASS. U.S.A.
MODEL No. 500
W.O. No.
SCALE
SHEET 1 OF 2
TITLE SCHEMATIC LOGIELOC #5948-1 KEYBOARD
D
5948-1
PART NUMBER
REV
SIZE
DRAWING NUMBER
IDENT
QTY
NAME
MATERIAL
DESCRIPTION
DR F.S.S.
DATE 5-24-71
CHK
APPD
TOL. EX. AS NOTED
.XX ±.010
.XXX ±.005
ANG. ±0°30'
FRAC. ±1/64
FINISH
MATERIAL
FINISH

DO NOT SCALE

| I.C. LOCATION | TYPE | W.L. NO. | TERM FOR ±0V | TERM FOR VCC +5VR | QTY. |
|---|---|---|---|---|---|
| L1, 3, 4 | F 9946 | 376-0023 | 7 | 14 | 3 |
| L2 | SN7406N | 376-0055 | 7 | 14 | 1 |

| COMPONENT | TYPE & SIZE | W.L. NO. | QTY. |
|---|---|---|---|
| R1, 2, 3, 4, 5, 6, 7, 9, 10 | 6.8K 1/4 W | 330-3066 | 9 |
| R8 | 3.3K 1/4 W | 330-3033 | 1 |
| R11, 12, 13, 14, 15, 16, 17, 18, 19, 20 | 10K 1/4 W | 330-4010 | 10 |
| | | | |
| C1, 2, 3, 4, 5, 6, 7, 8, 9, 10 | 150 μμf | 300-1150 | 10 |
| C11, 14 | 3.3μf 15V TANT. | 300-4016 | 2 |
| C12 | .05μf | 300-1900 | 1 |
| C13, 15 | 2.2μf 20V TANT. | 300-4014 | 2 |
| | | | |
| D | SIL. DIODE | 380-1001 | 214 |
| | | | |
| J3 | 225-21521-10500 | 350-0009 | 1 |
| | | | |
| DS1, 2, 3 | CLEAR, 1762 | 370-0004 | 3 |
| | | | |
| SW1, 2, 3, 4, 5, 6, 7, 8, 9, 10, 11, 12, 13, 15, 16, 17, 18, 19, 20, 21, 22, 23, 24, 25, 26, 27, 28, 29, 30, 31, 32, 33, 34, 35, 36, 37, 38, 39, 40, 41, 42, 43, 44, 45, 46, 47, 48, 49, 50, 51, 52, 53, 54, 55, 56, 57, 58, 59, 60, 61, 62 | MIC. SW. 11SM804 | 325-2300 | 61 |
| SW67, 68, 69, 70, 71 | MIC. SW. 11SM1 | 325-2305 | 5 |

REFERENCE ONLY, SWITCHES MOUNTED ON REAR OF BEARING PLATE

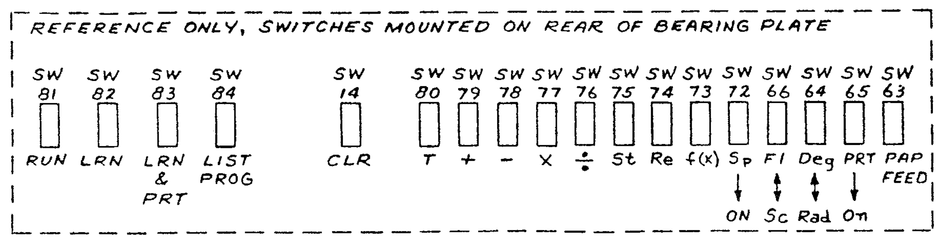


COMPONENT LAYOUT 5948

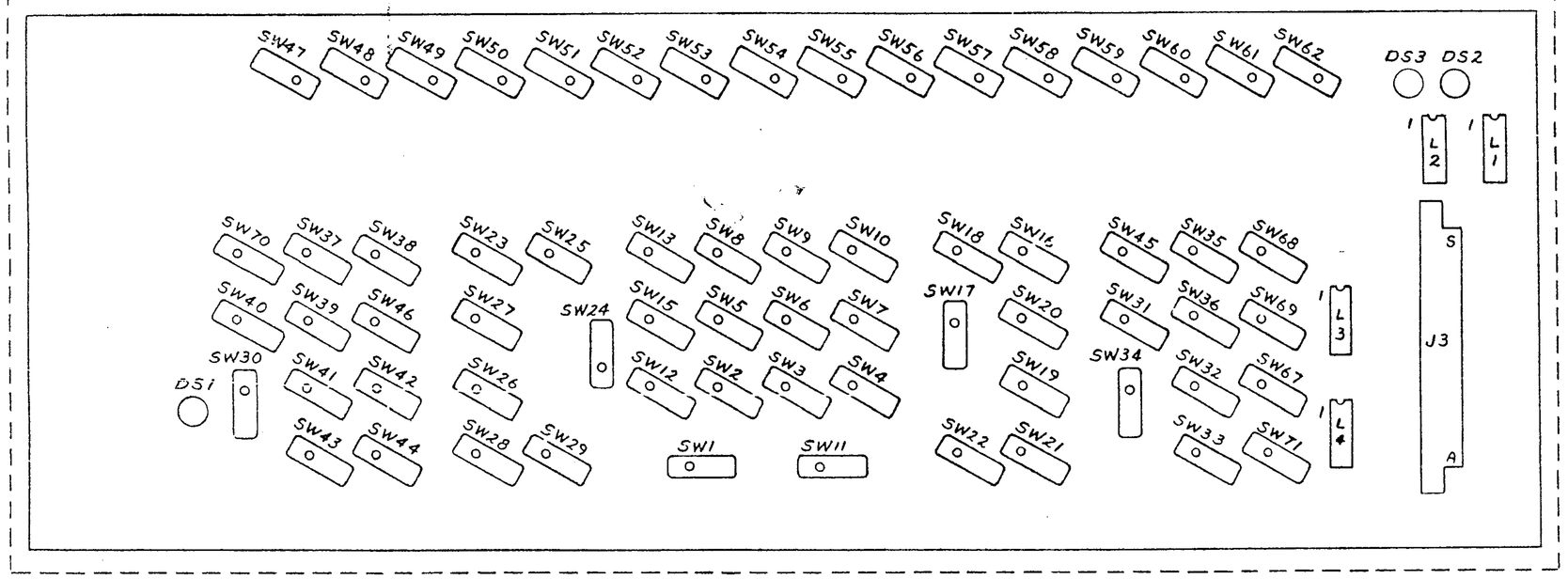


D 5948-1

| NO | REVISION | BY | DATE |
|---|---|---|---|

| IDENT | QTY | NAME | MATERIAL | DESCRIPTION |
|---|---|---|---|---|

TOL. EX. AS NOTED .XX ±.010 .XXX ±.005 ANG. ±0°30' FRAC. ±1/64
FINISH:
MATERIAL
FINISH

WANG LABORATORIES, INC.
TEWKSBURY, MASS. U.S.A.

DR F.S.S. DATE 5-26-71
CHK DATE
APPD DATE 6-18-71

MODEL No. 500 W.O. No. SCALE SHEET 2 OF 2

TITLE SCHEMATIC LOGIBLOC #5948-1 KEYBOARD

PART NUMBER REV SIZE D DRAWING NUMBER 5948-1

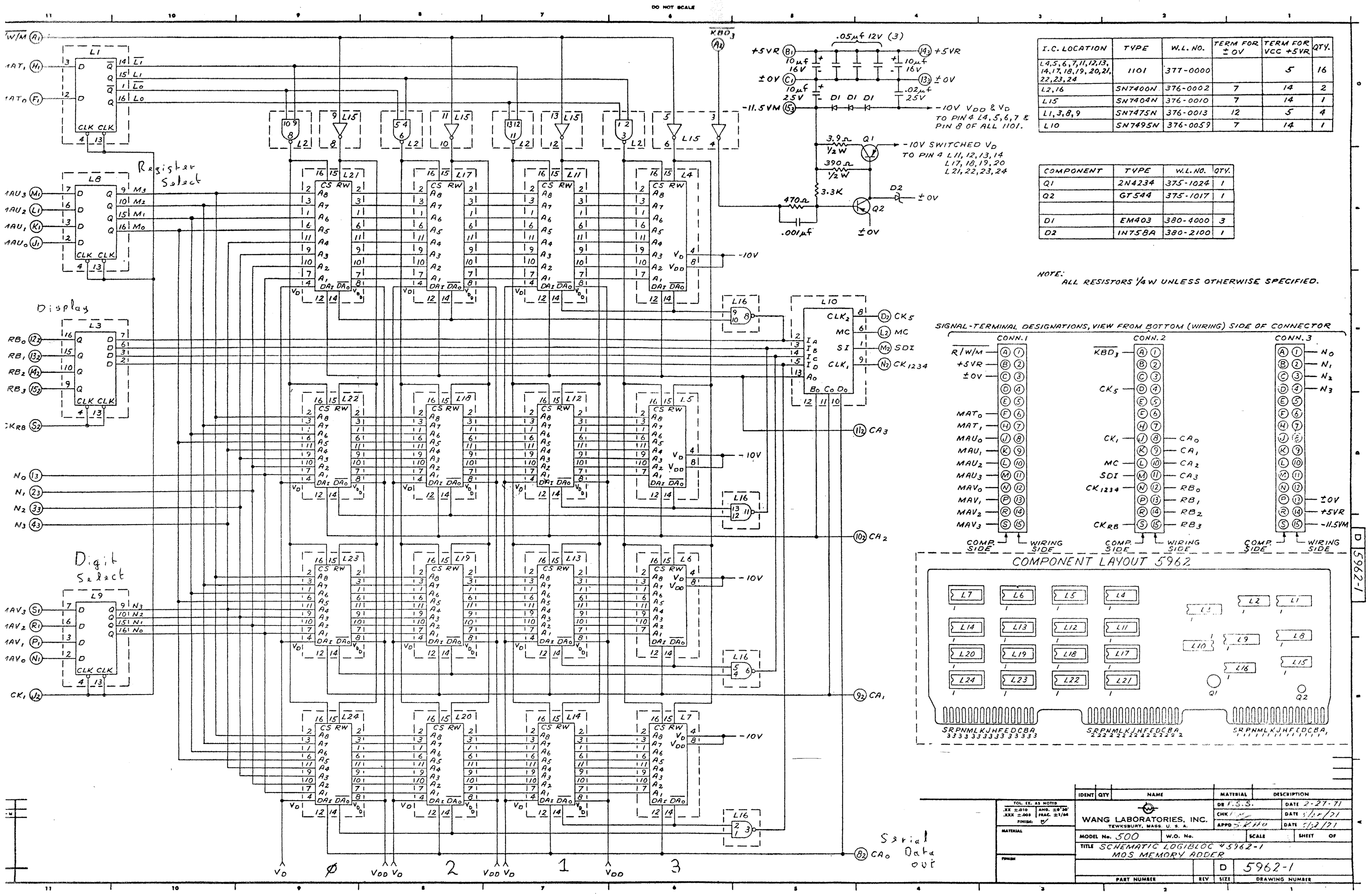


| I.C. LOCATION | TYPE | W.L. NO. | TERM FOR ±0V | TERM FOR VCC +5VR | QTY. |
|---|---|---|---|---|---|
| L4,5,6,7,11,12,13,14,17,18,19,20,21,22,23,24 | 1101 | 377-0000 | | 5 | 16 |
| L2,16 | SN7400N | 376-0002 | 7 | 14 | 2 |
| L15 | SN7404N | 376-0010 | 7 | 14 | 1 |
| L1,3,8,9 | SN7475N | 376-0013 | 12 | 5 | 4 |
| L10 | SN7495N | 376-0059 | 7 | 14 | 1 |

| COMPONENT | TYPE | W.L. NO. | QTY. |
|---|---|---|---|
| Q1 | 2N4234 | 375-1024 | 1 |
| Q2 | GT544 | 375-1017 | 1 |
| | | | |
| D1 | EM403 | 380-4000 | 3 |
| D2 | IN758A | 380-2100 | 1 |

NOTE: ALL RESISTORS 1/4 W UNLESS OTHERWISE SPECIFIED.

| IDENT | QTY | NAME | MATERIAL | DESCRIPTION |
|---|---|---|---|---|
| | | | DR F.S.S. | DATE 2-27-71 |
| | | WANG LABORATORIES, INC. TEWKSBURY, MASS. U.S.A. | CHK | DATE |
| | | | APPD | DATE |
| MODEL No. 500 | | W.O. No. | SCALE | SHEET OF |
| TITLE SCHEMATIC LOGIBLOC 5962-1 MOS MEMORY ADDER | | | | |
| PART NUMBER | | REV | SIZE D | DRAWING NUMBER 5962-1 |

TOL. EX. AS NOTED .XX ±.010 .XXX ±.005 ANG. ±0°30' FRAC. ±1/64 FINISH

MATERIAL

FINISH

D 5962-1

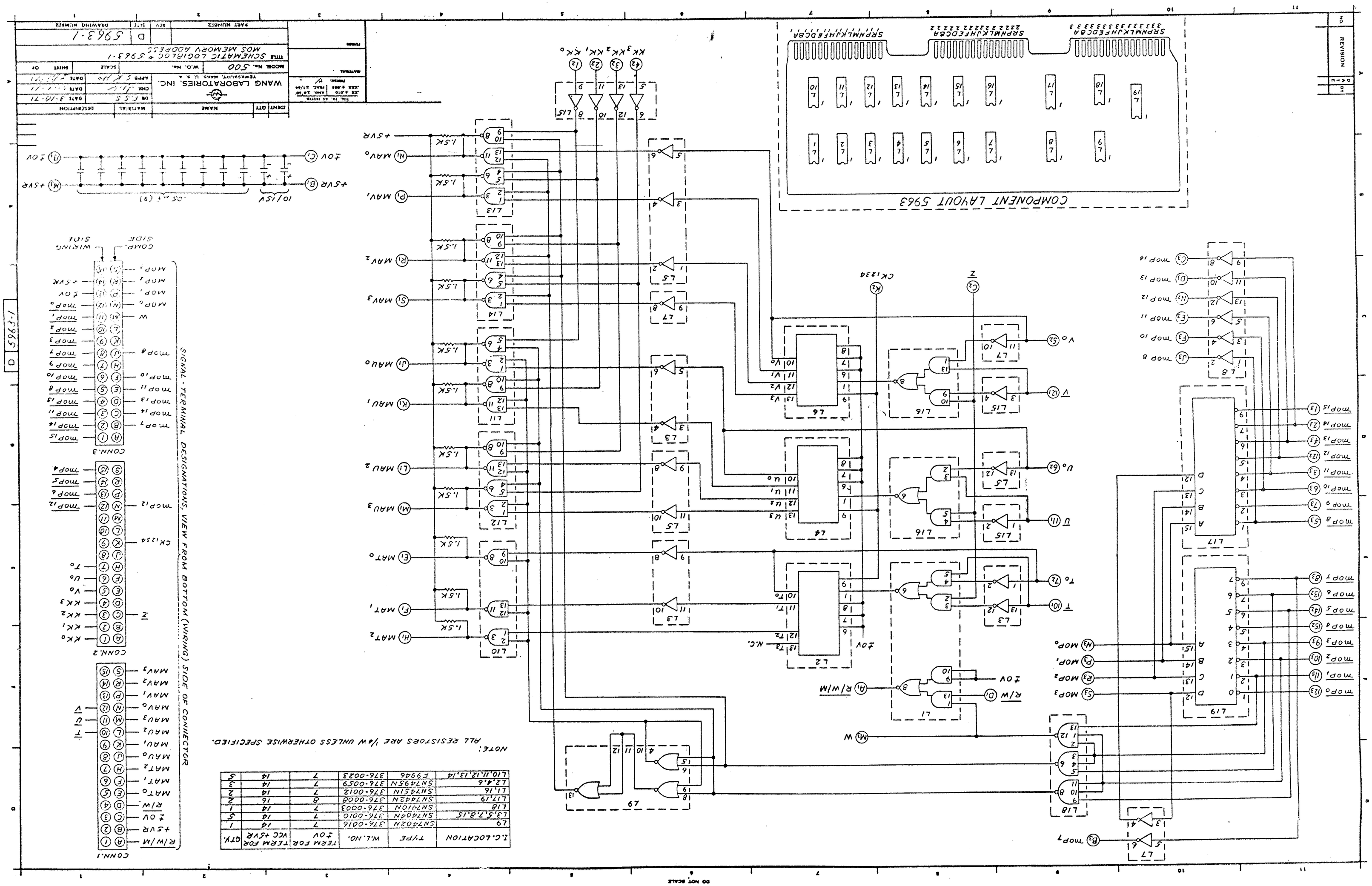


| I.C. LOCATION | TYPE | W.L. NO. | TERM FOR ±0V | TERM FOR VCC +5VR | QTY. |
|---|---|---|---|---|---|
| L9 | SN7402N | 376-0016 | 7 | 14 | 1 |
| L3,5,7,8,15 | SN7404N | 376-0010 | 7 | 14 | 5 |
| L18 | SN74100N | 376-0003 | 7 | 14 | 1 |
| L17,19 | SN7442N | 376-0008 | 8 | 16 | 2 |
| L1,16 | SN7451N | 376-0012 | 7 | 14 | 2 |
| L2,4,6 | SN7495N | 376-0059 | 7 | 14 | 3 |
| L10,11,12,13,14 | F9946 | 376-0023 | 7 | 14 | 5 |

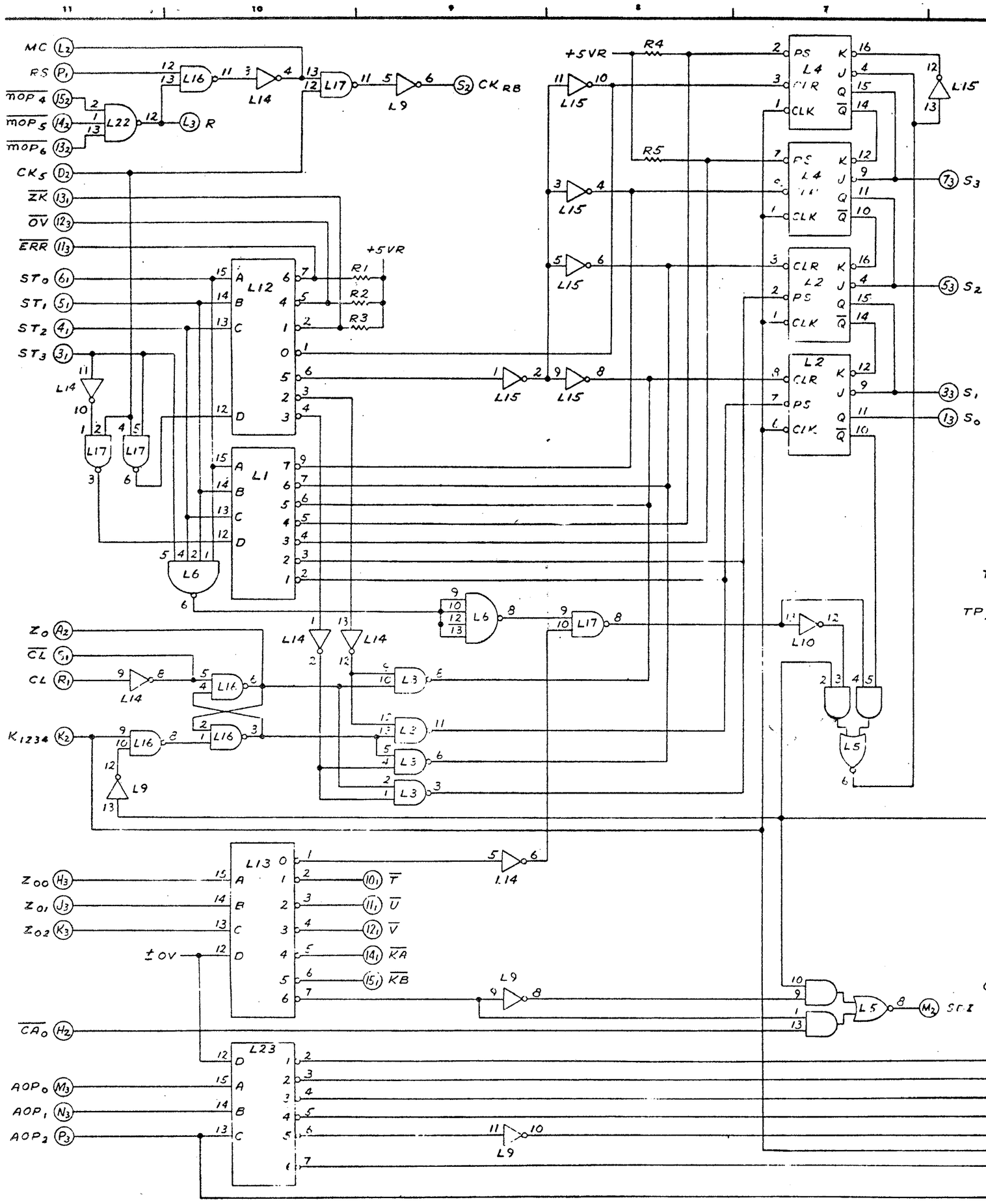


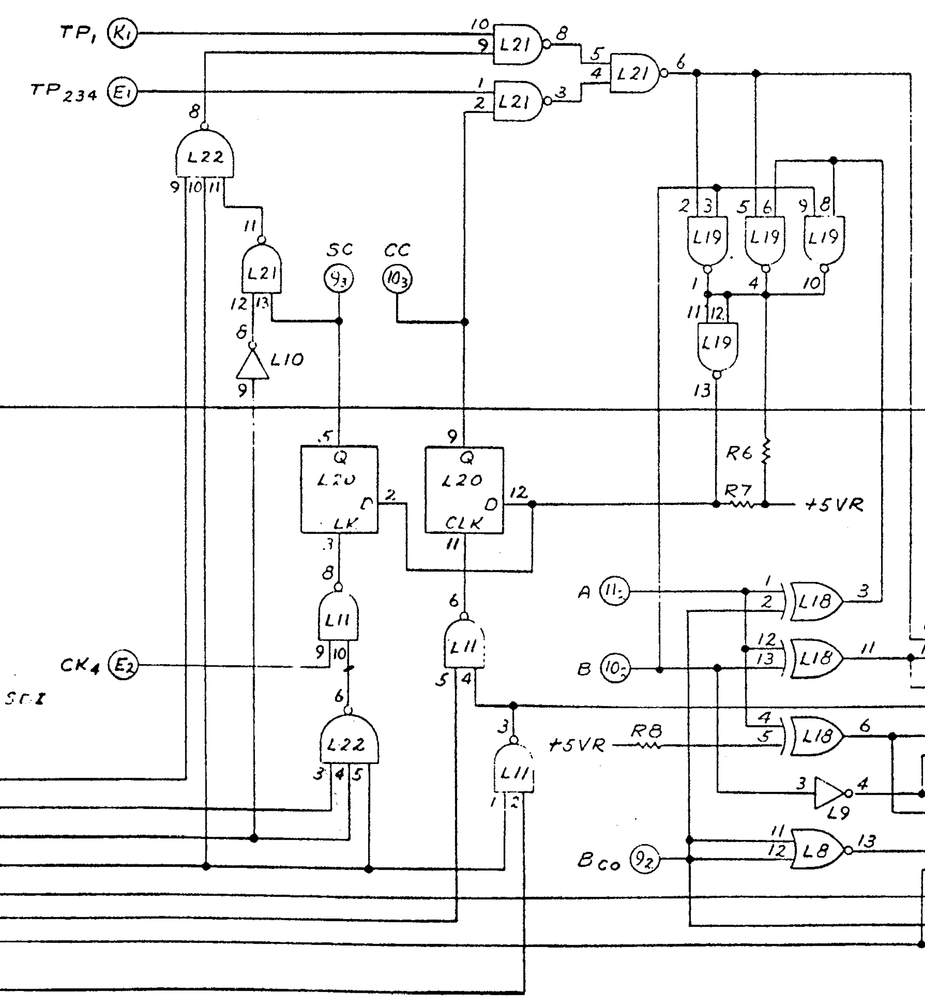


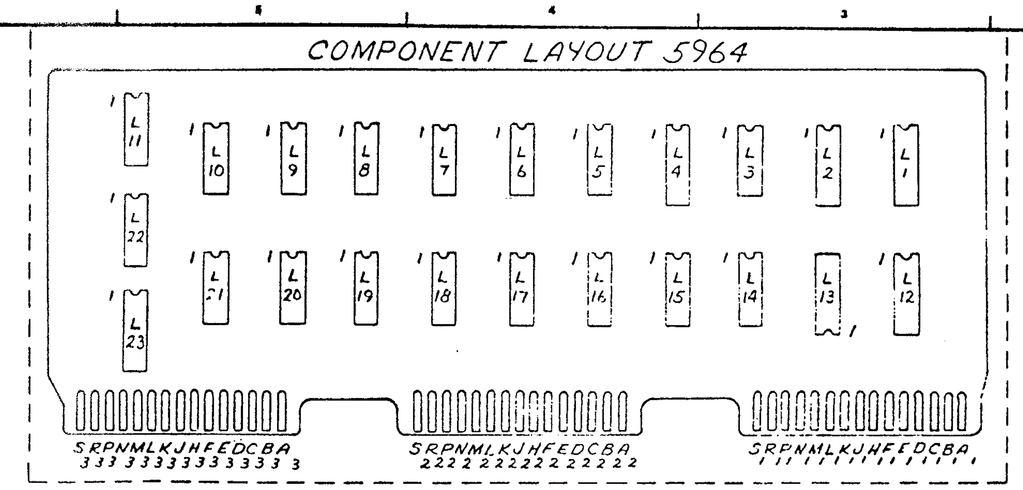


| I.C. LOCATION | TYPE | W.L.NO. | TERM FOR ±OV | TERM FOR VCC +5VR | QTY. |
|---|---|---|---|---|---|
| L11,12,17,21 | SN7400N | 376-0002 | 7 | 14 | 4 |
| L19 | SN7401N | 376-0015 | 7 | 14 | 1 |
| L8 | SN7402N | 376-0016 | 7 | 14 | 1 |
| L9,10,14 | SN7404N | 376-0010 | 7 | 14 | 3 |
| L22 | SN7410N | 376-0003 | 7 | 14 | 1 |
| L6 | SN7420N | 376-0004 | 7 | 14 | 1 |
| L13,23 | SN7442N | 376-0008 | 8 | 16 | 2 |
| L1,12 | SN74145 | 376-0019 | 8 | 16 | 2 |
| L5 | SN7451N | 376-0012 | 7 | 14 | 1 |
| L7 | SN7453N | 376-0057 | 7 | 14 | 1 |
| L20 | SN7474N | 376-0006 | 7 | 14 | 1 |
| L2,4 | SN7476N | 376-0007 | 13 | 5 | 2 |
| L18 | SN7486N | 376-0036 | 7 | 14 | 1 |
| L15 | F9935 | 376-0025 | 7 | 14 | 1 |
| L3 | F9946 | 376-0023 | 7 | 14 | 1 |

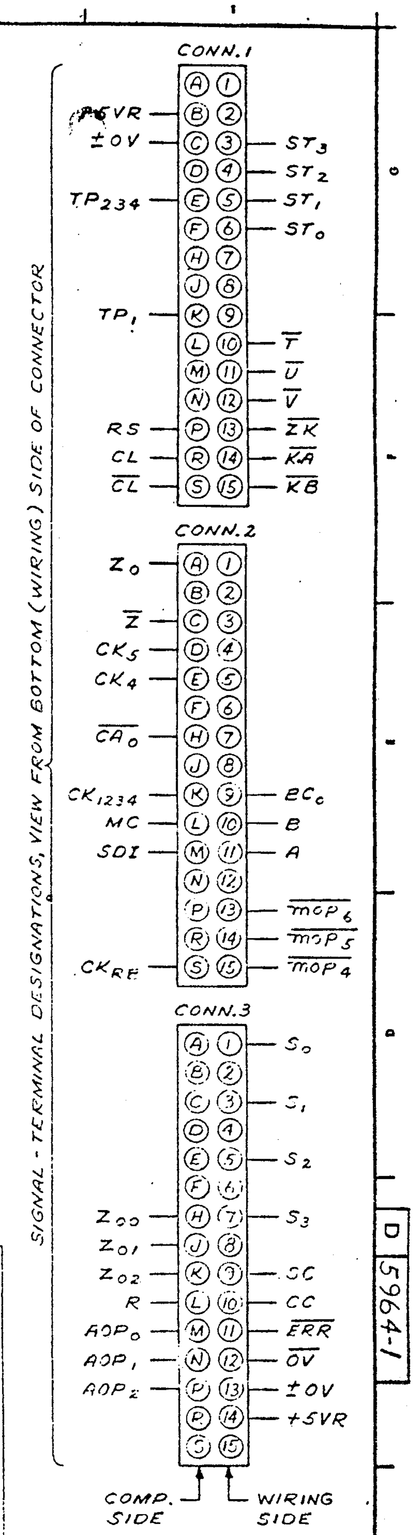


| COMPONENT | TYPE & SIZE | W.L.NO. | QTY. |
|---|---|---|---|
| R1,2,3,4,5 | 1K 1/4 W | 330-3010 | 5 |
| R6 | 680Ω 1/4 W | 330-2068 | 1 |
| R7 | 2.2K 1/4 W | 330-3022 | 1 |
| R8 | 10K 1/4 W | 330-4010 | 1 |
| | | | |
| C1,2,3,4,5,6,7 | .05µf 12V CER. | 300-1900 | 7 |
| C8,9 | 10µf 15V ELECT. | 300-3006 | 2 |

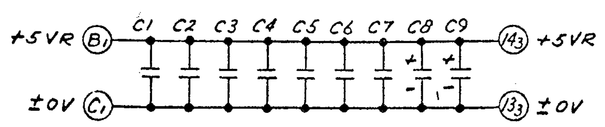


| IDENT | QTY | NAME | MATERIAL | DESCRIPTION |
|---|---|---|---|---|
| | | WANG LABORATORIES, INC. TEWKSBURY, MASS. U.S.A. | DR F.S.S. | DATE 4-20-71 |
| | | | CHK | DATE |
| | | | APPD | DATE |
| MODEL No. 500 | | W.O. No. | SCALE | SHEET OF |
| TITLE SCHEMATIC LOGIBLOC #5964-1 ALU | | | | |
| PART NUMBER | | | REV 2 | SIZE D |
| DRAWING NUMBER 5964-1 | | | | |

TOL. EX. AS NOTED .XX ±.010 .XXX ±.005 ANG. ±0°30' FRAC. ±1/64 FINISH:

MATERIAL

FINISH

REVISED PER E.C. 42397 APPD. 3-4-71

REVISED PER E.C. 42396 APPD. 3-4-71

D 5964-1

DO NOT SCALE

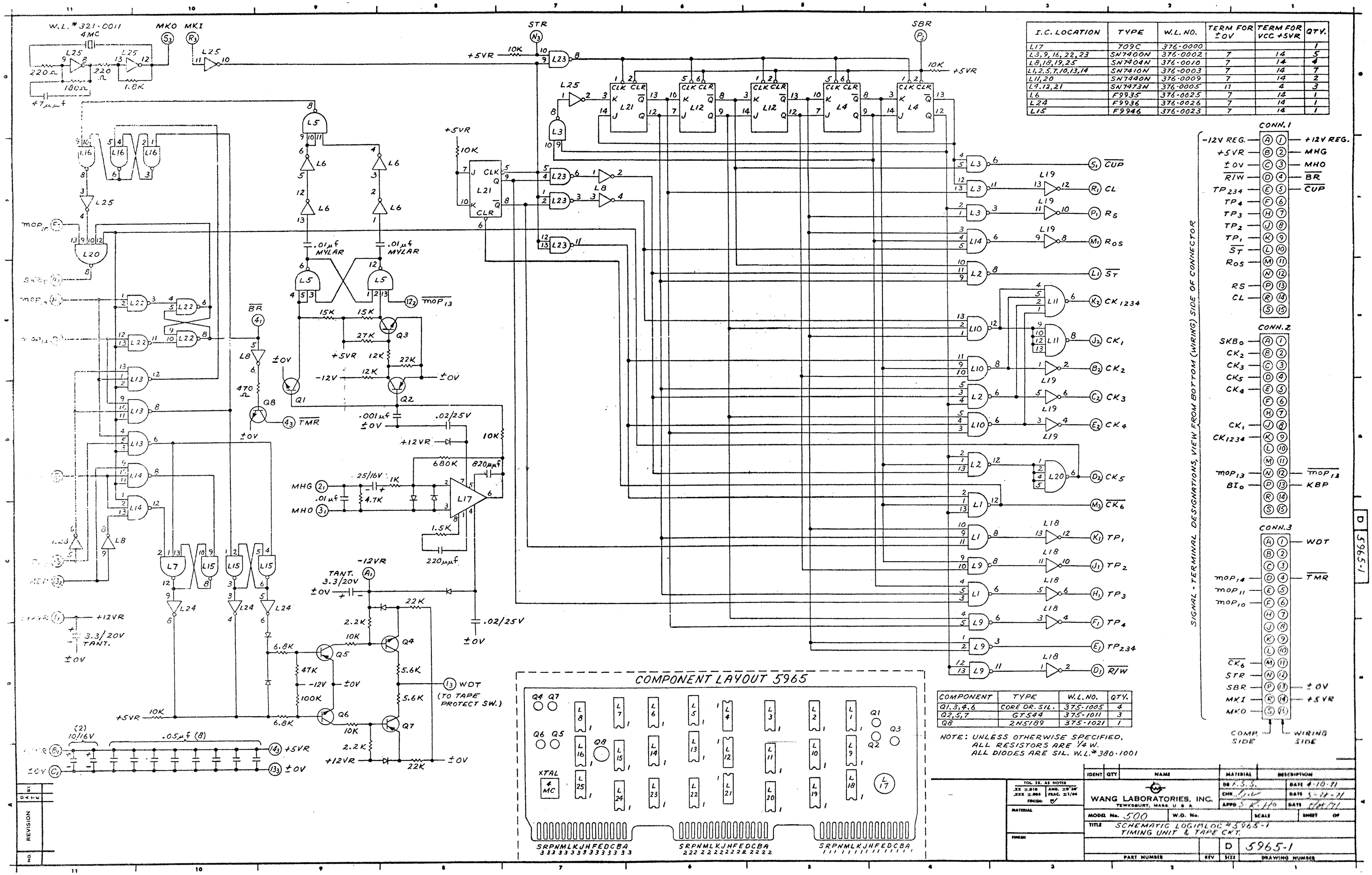


| I.C. LOCATION | TYPE | W.L. NO. | TERM FOR ±0V | TERM FOR VCC +5VR | QTY. |
|---|---|---|---|---|---|
| L17 | 709C | 376-0000 | | | 1 |
| L3,9,16,22,23 | SN7400N | 376-0002 | 7 | 14 | 5 |
| L8,18,19,25 | SN7404N | 376-0010 | 7 | 14 | 4 |
| L1,2,5,7,10,13,14 | SN7410N | 376-0003 | 7 | 14 | 7 |
| L11,20 | SN7440N | 376-0009 | 7 | 14 | 2 |
| L4,12,21 | SN7473N | 376-0005 | 11 | 4 | 3 |
| L6 | F9935 | 376-0025 | 7 | 14 | 1 |
| L24 | F9936 | 376-0026 | 7 | 14 | 1 |
| L15 | F9946 | 376-0023 | 7 | 14 | 1 |

| COMPONENT | TYPE | W.L.NO. | QTY. |
|---|---|---|---|
| Q1,3,4,6 | CORE DR. SIL. | 375-1005 | 4 |
| Q2,5,7 | GT544 | 375-1011 | 3 |
| Q8 | 2N5189 | 375-1021 | 1 |

NOTE: UNLESS OTHERWISE SPECIFIED,
ALL RESISTORS ARE 1/4 W.
ALL DIODES ARE SIL. W.L.# 380-1001

| IDENT | QTY | NAME | MATERIAL | DESCRIPTION |
|---|---|---|---|---|
| | | | DR. R.S.S. | DATE 4-10-71 |
| | | | CHK. J.C. | DATE 5-28-71 |
| | | | APPD. S.K.H. | DATE 6/28/71 |

TOL. EX. AS NOTED .XX ±.010 .XXX ±.005 ANG. ±0°30' FRAC. ±1/64 FINISH

MATERIAL

FINISH

WANG LABORATORIES, INC.
TEWKSBURY, MASS. U.S.A.

MODEL No. 500 | W.O. No. | SCALE | SHEET OF

TITLE SCHEMATIC LOGIALOC #5965-1
TIMING UNIT & TAPE CKT.

PART NUMBER | REV | SIZE D | DRAWING NUMBER 5965-1

REVISION | NO. | BY | DATE

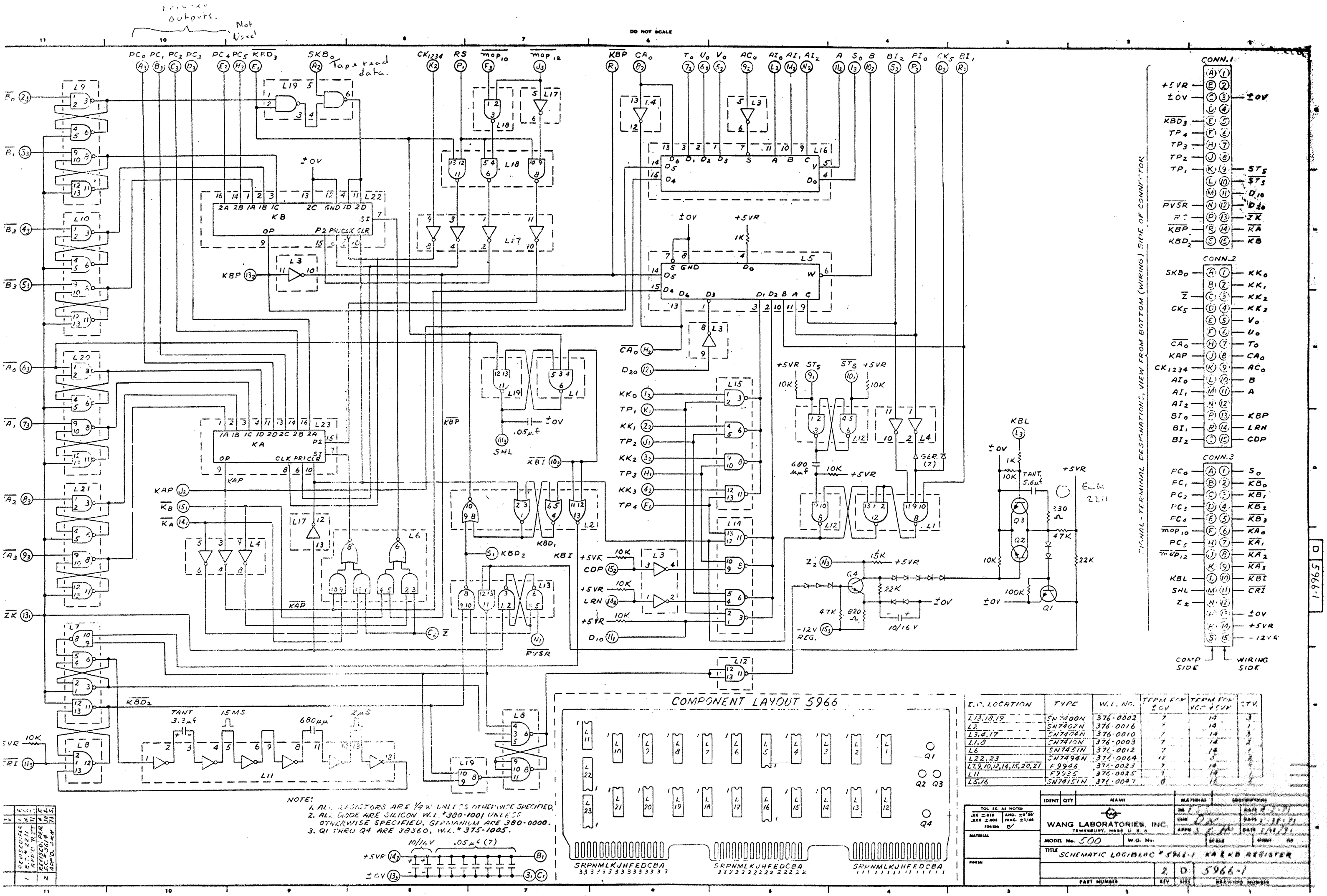


| I.C. LOCATION | TYPE | W.L. NO. | TERM FOR ±0V | TERM FOR VCC +5VR | QTY. |
|---|---|---|---|---|---|
| L13,18,19 | SN7400N | 376-0002 | 7 | 14 | 3 |
| L2 | SN7402N | 376-0016 | 7 | 14 | 1 |
| L3,4,17 | SN7404N | 376-0010 | 7 | 14 | 3 |
| L1,8 | SN7410N | 376-0003 | 7 | 14 | 2 |
| L6 | SN7451N | 376-0012 | 7 | 14 | 1 |
| L22,23 | SN7494N | 376-0064 | 12 | 5 | 2 |
| L7,9,10,12,14,15,20,21 | F9946 | 376-0023 | 7 | 14 | 8 |
| L11 | F9935 | 376-0025 | 7 | 14 | 1 |
| L5,16 | SN7413N | 376-0047 | 8 | 16 | 2 |

| REV | REVISIONS | BY | DATE |
|---|---|---|---|
| 1 | REVISED PER ECO #3016 APPD. TRT | W.C. | 11-1-71 |
| 2 | REVISED PER ECO #3014 APPD. WCM | D.S.C. | 12-5-71 |

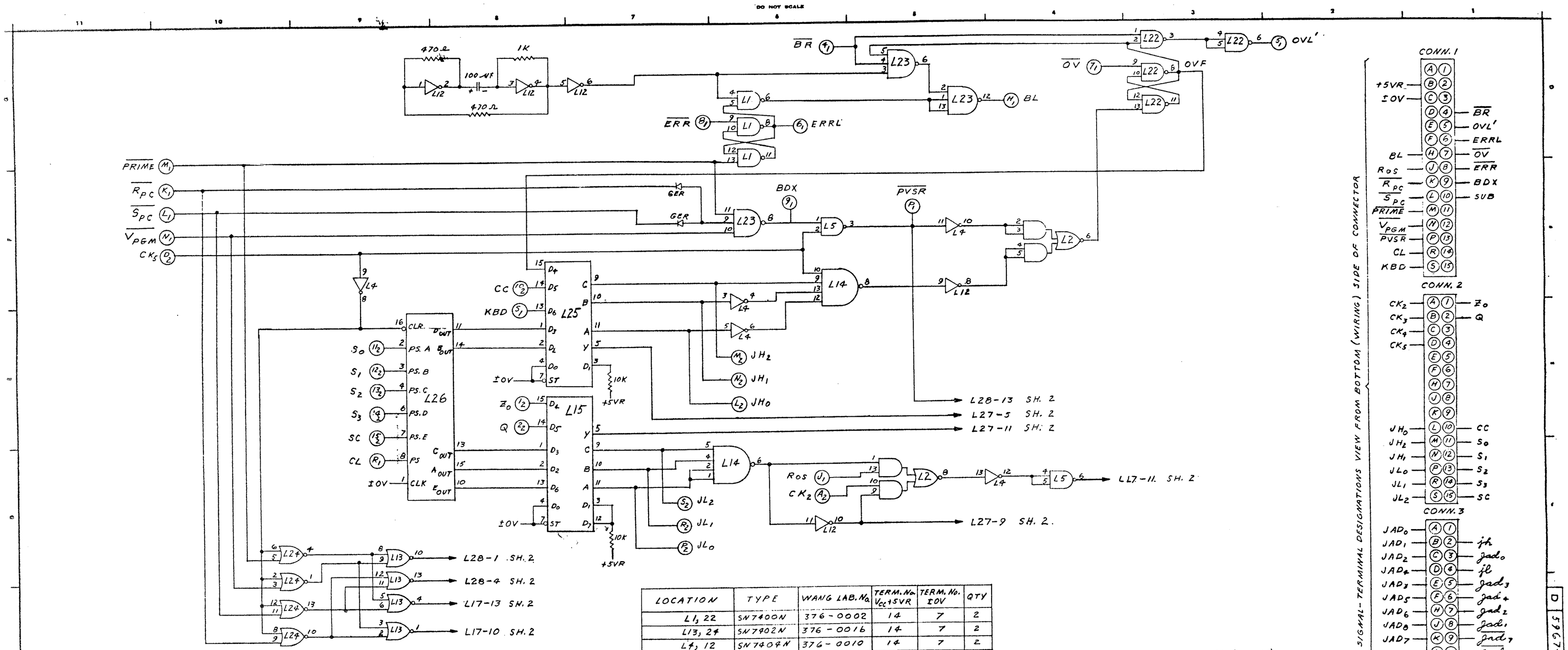


| LOCATION | TYPE | WANG LAB. No. | TERM. No. $V_{CC}$ +5VR | TERM. No. ±0V | QTY |
|---|---|---|---|---|---|
| L1, 22 | SN7400N | 376-0002 | 14 | 7 | 2 |
| L13, 24 | SN7402N | 376-0016 | 14 | 7 | 2 |
| L4, 12 | SN7404N | 376-0010 | 14 | 7 | 2 |
| L23 | SN7410N | 376-0003 | 14 | 7 | 1 |
| L14 | SN7420N | 376-0004 | 14 | 7 | 1 |
| L5 | SN7437N | 376-0068 | 14 | 7 | 1 |
| L2, 3 | SN7451N | 376-0012 | 14 | 7 | 2 |
| L17, 19, 21, 28, 30, 32 | SN7474N | 376-0006 | 14 | 7 | 6 |
| L6, 8, 10, 16, 18, 20 | SN7475N | 376-0013 | 5 | 12 | 6 |
| L26 | SN7496N | 376-0065 | 5 | 12 | 1 |
| L15, 25 | SN74151N | 376-0047 | 16 | 8 | 2 |
| L7, 9, 11, 27, 29, 31 | N8266B | 376-0041 | 16 | 8 | 6 |

NOTE:
1. ALL DIODES ARE GER. WL380-0000 (QTY 2)
2. ALL RESISTORS ARE 1/4 W

COMPONENT LAYOUT

5967

WANG LABORATORIES, INC.
TEWKSBURY, MASS. U.S.A.

MODEL No. 500

TITLE SCHEMATIC LOGIBLOC, MEM APP REG. # 5967

D 5967-1

REVISION

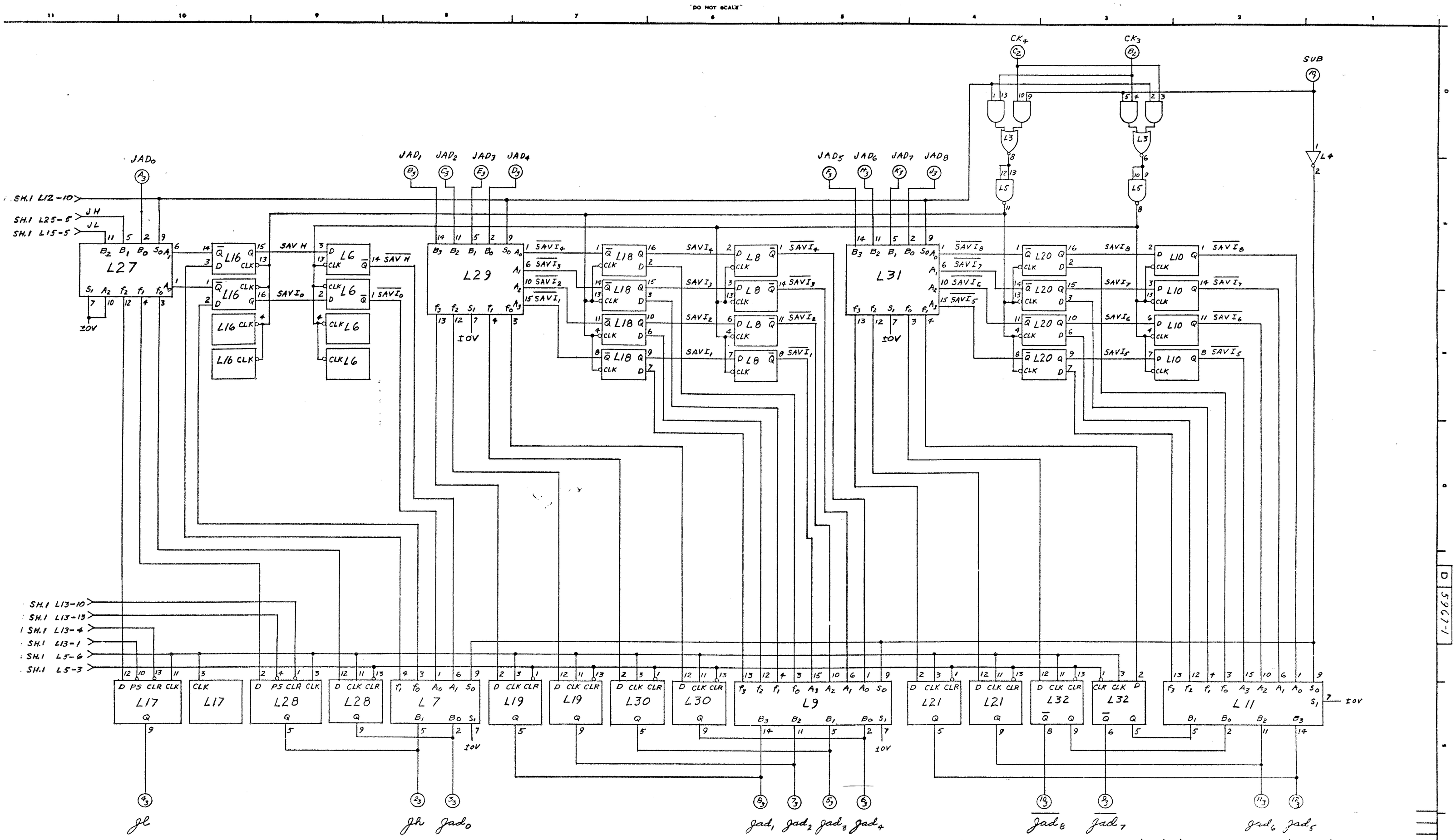
"DO NOT SCALE"
JAD0
JAD1 JAD2 JAD3 JAD4
JAD5 JAD6 JAD7 JAD8
CK4
CK3
SUB
SH.1 L12-10
SH.1 L25-8
SH.1 L15-5
JH
JL
L27
L29
L31
L16
L6
L18
L8
L20
L10
L3
L5
L4
SAV H
SAVI0
SAVI1
SAVI2
SAVI3
SAVI4
SAVI5
SAVI6
SAVI7
SAVI8
SH.1 L13-10
SH.1 L13-13
SH.1 L13-4
SH.1 L13-1
SH.1 L5-6
SH.1 L5-3
L17
L28
L7
L19
L30
L9
L21
L32
L11
jl
jh
jad0
jad1 jad2 jad3 jad4
jad8 jad7
jad6 jad5
WANG LABORATORIES, INC.
TEWKSBURY, MASS. U. S. A.
MODEL No. 500
W.O. No.
SCALE
SHEET 2 OF 2
TITLE SCHEMATIC LOGIBLOC, ROM ADD- REG. # 5967
PART NUMBER
REV
SIZE D
DRAWING NUMBER 5967-1
MATERIAL
FINISH
IDENT
QTY
NAME
MATERIAL
DESCRIPTION
DR
CHK
APPD
DATE
TOL. XX. AS NOTED
.XX ±.010
.XXX ±.005
ANG. ±0°30'
FRAC. ±1/64
D 5967-1

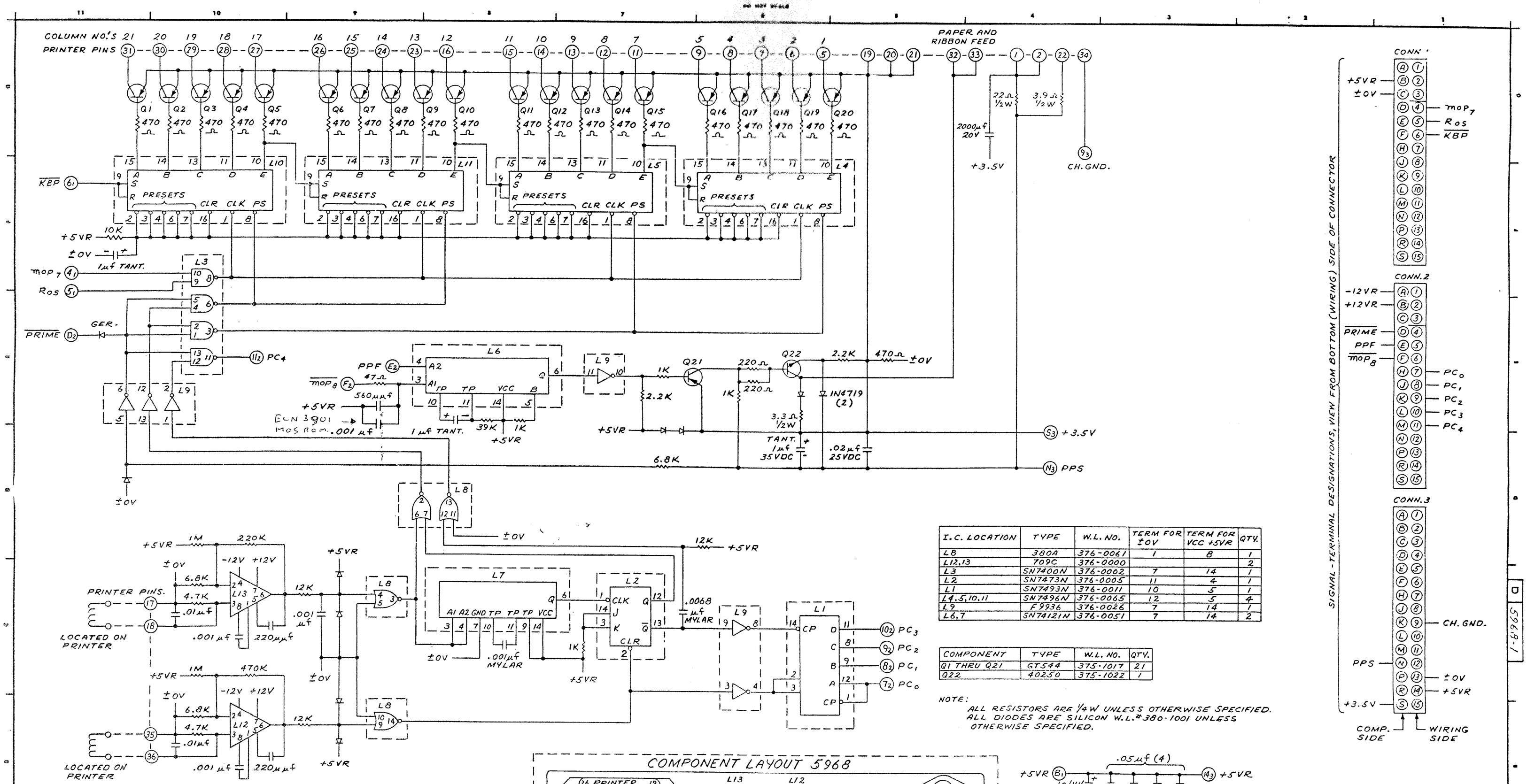


| I.C. LOCATION | TYPE | W.L. NO. | TERM FOR ±0V | TERM FOR VCC +5VR | QTY. |
|---|---|---|---|---|---|
| L8 | 380A | 376-0061 | 1 | 8 | 1 |
| L12,13 | 709C | 376-0000 | | | 2 |
| L3 | SN7400N | 376-0002 | 7 | 14 | 1 |
| L2 | SN7473N | 376-0005 | 11 | 4 | 1 |
| L1 | SN7493N | 376-0011 | 10 | 5 | 1 |
| L4,5,10,11 | SN7496N | 376-0065 | 12 | 5 | 4 |
| L9 | F9936 | 376-0026 | 7 | 14 | 1 |
| L6,7 | SN74121N | 376-0051 | 7 | 14 | 2 |

| COMPONENT | TYPE | W.L. NO. | QTY. |
|---|---|---|---|
| Q1 THRU Q21 | GT544 | 375-1017 | 21 |
| Q22 | 40250 | 375-1022 | 1 |

NOTE:
ALL RESISTORS ARE 1/4 W UNLESS OTHERWISE SPECIFIED.
ALL DIODES ARE SILICON W.L.#380-1001 UNLESS OTHERWISE SPECIFIED.

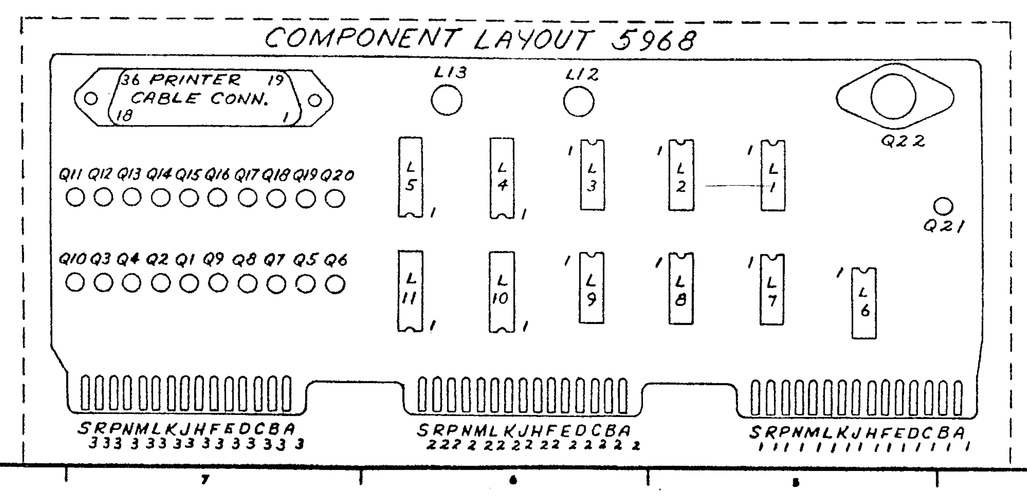


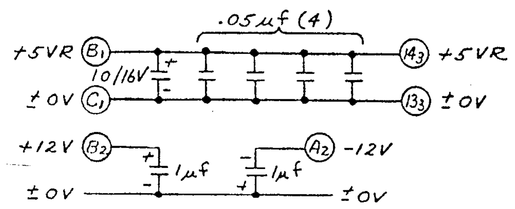


| NO. | REVISION | BY | DATE |
|---|---|---|---|
| 1 | REVISED PER E.C.#2235 APP'D. 3-4-70 | F.S.S. | 7-2-70 |
| 2 | REVISED PER E.C.#2387 APP'D. 3-4-70 | F.S.S. | 9-9-70 |
| 3 | REVISED PER E.C.#3194 APP'D. 3-4-70 | F.S.S. | 11-5-70 |
| 4 | REVISED PER E.C.#3195 ADD'D. SHT. | F.S.S. | 12-2-70 |
| 5 | REVISED PER E.C.#3500 APP'D. 3-4-70 | F.S.S. | 12-3-70 |
| 6 | REVISED PER E.C.#3901 APP'D. 3-4-70 | F.S.S. | 1-6-71 |

| IDENT | QTY | NAME | MATERIAL | DESCRIPTION |
|---|---|---|---|---|
| | | | | |

TOL. EX. AS NOTED .XX ±.010 .XXX ±.005 ANG. ±0°30' FRAC. ±1/64 FINISH: ✓

MATERIAL

FINISH

WANG LABORATORIES, INC. TEWKSBURY, MASS. U.S.A.

DR F.S.S. DATE 3-8-71
CHK. DATE 3/24/71
APPD DATE 4/1/71

MODEL No. 500 W.O. No. SCALE SHEET OF

TITLE SCHEMATIC LOGIBLOC #5968-1
PRINTER BOARD FOR MOD. 500

PART NUMBER 6 REV D SIZE 5968-1 DRAWING NUMBER

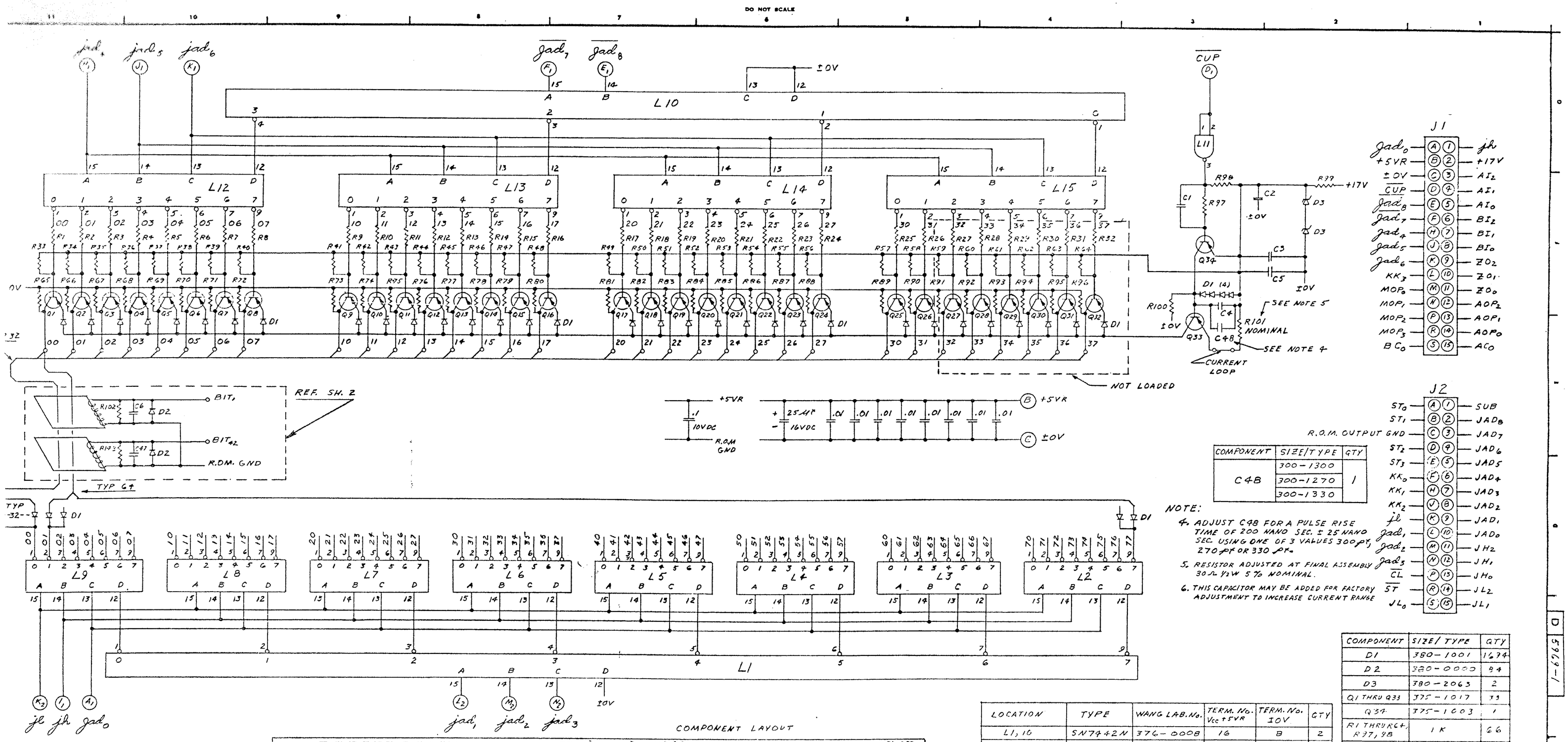


| COMPONENT | SIZE/TYPE | QTY |
|---|---|---|
| C4B | 300-1300 | 1 |
| | 300-1270 | |
| | 300-1330 | |

NOTE:

4. ADJUST C4B FOR A PULSE RISE TIME OF 200 NANO SEC. ± 25 NANO SEC. USING ONE OF 3 VALUES 300 pf, 270 pf OR 330 pf.
5. RESISTOR ADJUSTED AT FINAL ASSEMBLY 30 Ω 1/2 W 5% NOMINAL.
6. THIS CAPACITOR MAY BE ADDED FOR FACTORY ADJUSTMENT TO INCREASE CURRENT RANGE

| COMPONENT | SIZE/TYPE | QTY | |
|---|---|---|---|
| D1 | 380-1001 | 1674 | |
| D2 | 380-0000 | 84 | |
| D3 | 380-2063 | 2 | |
| Q1 THRU Q33 | 375-1017 | 33 | |
| Q34 | 375-1603 | 1 | |
| R1 THRU R4, R37, 38 | 1 K | 66 | |
| R65 THRU R96 | 1.5 K | 32 | |
| R99 | 33 Ω 1 W | 1 | |
| R100 | 470 Ω 1/2 W | 1 | |
| R101 | 30 Ω 1/2 W | 1 | NOM. |
| R102 THRU R143 | 3.9 K | 42 | |
| C1 | .001 μf | 1 | |
| C2 | 100 μf 20 VDC | 1 | |
| C3 | .1 μf 20 VDC | 1 | |
| C4 | .0015 μf MYLAR | 1 | |
| C5 | 25 μf 16 V DC | 1 | |
| C6 THRU C47 | 56 PF CER. | A/R | SEE NOTE 3 |
| C49 | .001 μf | 1 | SEE NOTE 6 |

| LOCATION | TYPE | WANG LAB. No. | TERM. No. Vcc +5VR | TERM. No. 10V | QTY |
|---|---|---|---|---|---|
| L1, 10 | SN7442N | 376-0008 | 16 | 8 | 2 |
| L2, 3, 4, 5, 6, 7, 8, 9, 12, 13, 14, 15 | SN74145N | 376-0069 | 16 | 8 | 12 |
| L11 | SN7426N | 376-0067 | 14 | 7 | 1 |
| L16 THRU L36 | SP380A | 376-0061 | 8 | 1 | 21 |

NOTE

1. ALL RESISTORS ARE 1/4W EXCEPT AS NOTED
2. DRIVING STAGES ARE LOADED THRU ADDRESS 31 ONLY
3. THESE CAPACITORS MAY BE ADDED FOR FACTORY ADJUSTMENT METHOD TO ELIMINATE NOISY BITS AS DETERMINED BY FINAL TEST

MODEL - 500, 520, 600, 1200

PART No. 210/810-5969/310/310-5969A

COMPONENT LAYOUT

| | | | |
|---|---|---|---|
| 1 | PER ECO 2177 ADDED DIODE CHG'S AND NOTE 5 APP. RJT | 6/27/71 | RJT |
| 2 | PER ECN 2392 L2,3,4,5,6,7,8 376-0069 APP.-SKM | 9/10/71 | SKM |
| 3 | PER ECO 2931 ADDED CAP C48 APP. SKM | 7/9/72 | SKM |

TOL. EX. AS NOTED .XX ±.010 .XXX ±.003 ANG. ±0°30' FRAC. ±1/64 FINISH:

MATERIAL

FINISH

| IDENT | QTY | NAME | MATERIAL | DESCRIPTION |
|---|---|---|---|---|
| | | | DR | DATE 4/23/71 |
| | | | CHK | DATE 1/27/71 |
| | | | APPD | DATE 5/25/71 |

WANG LABORATORIES, INC. TEWKSBURY, MASS. U.S.A.

MODEL No. 500 W.O. No. SCALE (-77) SHEET 1 OF 2

TITLE SCHEMATIC LOGIBLOC, R.O.M. DECODER & DRIVER #5969

| PART NUMBER | REV | SIZE | DRAWING NUMBER |
|---|---|---|---|
| | 5 | D | 5969-1 |

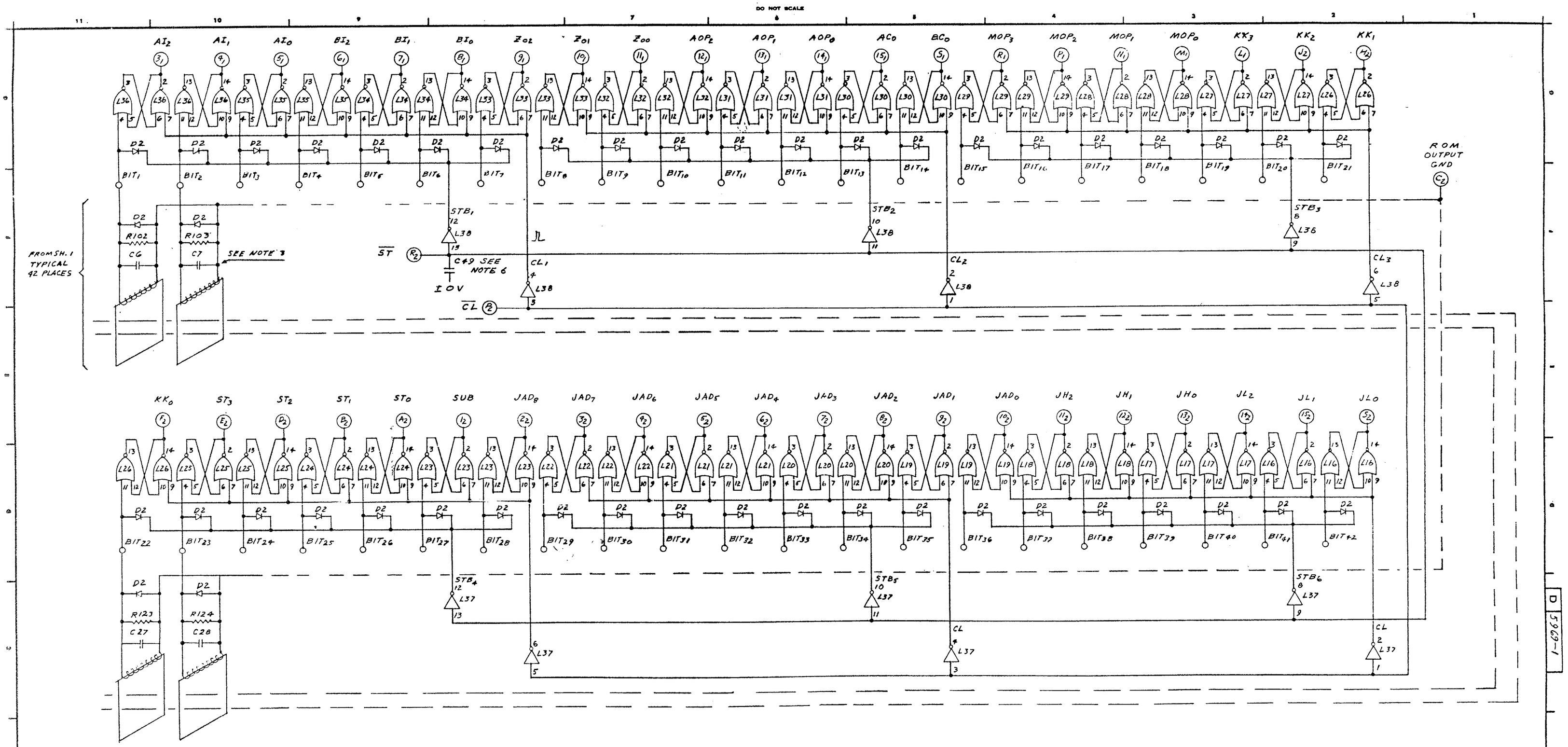


| REVISION | BY | DATE |
|---|---|---|
| 4 PER ECN H2988 ADDED C49 .001 4.C APP. [illegible] | [illegible] | 5/20/72 |
| 5 PER ECN 3031 ADDED NTS 5 APP. [illegible] | [illegible] | 6/20/72 |

TOL. EX. AS NOTED
.XX ±.010 ANG. ±0°30'
.XXX ±.005 FRAC. ±1/64
FINISH: ✓
MATERIAL
FINISH

| IDENT | QTY | NAME | MATERIAL | DESCRIPTION |
|---|---|---|---|---|
| | | | | |

WANG LABORATORIES, INC.
TEWKSBURY, MASS. U. S. A.

DR [illegible] DATE 4/20/71
CHK [illegible] DATE 5/1/71
APPD [illegible] DATE 5/6/71

MODEL No. 500 W.O. No. SCALE 4:1 SHEET 2 OF 2

TITLE SCHEMATIC LOGIC LOC, R.O.M. DECODER & DRIVER THE 5969

| PART NUMBER | REV | SIZE | DRAWING NUMBER |
|---|---|---|---|
| | 5 | D | 5969-1 |

D 5969-1

DO NOT SCALE

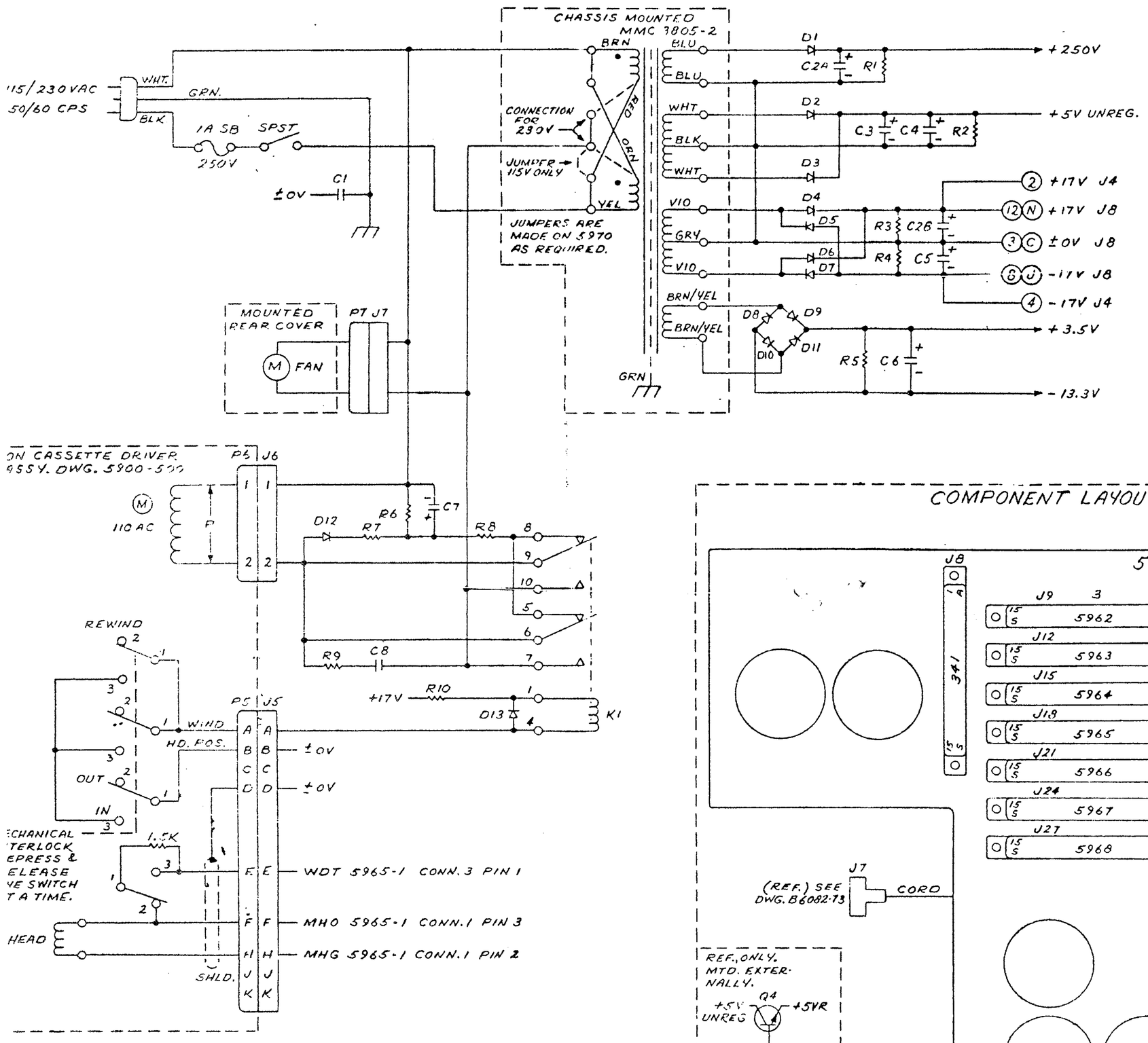


| COMPONENT | SIZE, TYPE | W.L. NO. | QTY |
|---|---|---|---|
| R1 | 270K 1/2W | 331-5027 | 1 |
| R2,3,4,5 | 10K 1/4W | 330-4010 | 4 |
| R6 | 820Ω 1W | 332-2082 | 1 |
| R7 | 5.6K 1W | 332-3056 | 1 |
| R8 | 47Ω 1/2W | 331-1047 | 1 |
| R9 | 100Ω 1/4W | 330-2010 | 1 |
| R10 | 82Ω 1W | 332-1082 | 1 |
| | | | |
| C1 | 47/400 VDC | 300-2347 | 1 |
| C2A | 30/350 VDC | 300-3018 | 1 |
| C2B | 3000/20VDC | | |
| C3,4 | 14000/12 VDC | 300-3045 | 2 |
| C5,6 | 6000/20VDC | 300-3019 | 2 |
| C7 | 500/25 VDC | 300-3021 | 1 |
| C8 | .1μf 100 VDC | 300-2410 | 1 |
| D1 | 1N3255 | 380-3001 | 1 |
| D2,3,4,5,6,7,8,9,10,11 | 1N4719 | 380-3002 | 10 |
| D12,13 | EM403 | 380-4000 | 2 |
| | | | |
| K1 | SIGMA 62R2-12DC | 320-0042 | 1 |

| PART | SIZE, TYPE | W.L. NO. | QTY. |
|---|---|---|---|
| SOCKET | K1, AD-41 | 341-0018 | 1 |
| | | | |
| P1,2,3 | 5223 | 510-5223 | 3 |
| | | | |
| J4 | 57-40360 AMP. | 350-1038 | 1 |
| J5 | 126-221 AMP. | 350-1003 | 1 |
| J6 | 302-AB CINCH JONES | 654-1110 | 1 |
| J7 | 16415 RETRON CORD | 420-1005 | 1 |
| J8 TO J31 | 225-21521-110 AMP. | 350-0011 | 24 |
| | | | |
| RIVETS, J6 | 1/8 DIA. x 3/16 LG., POP | 651-0401 | 2 |

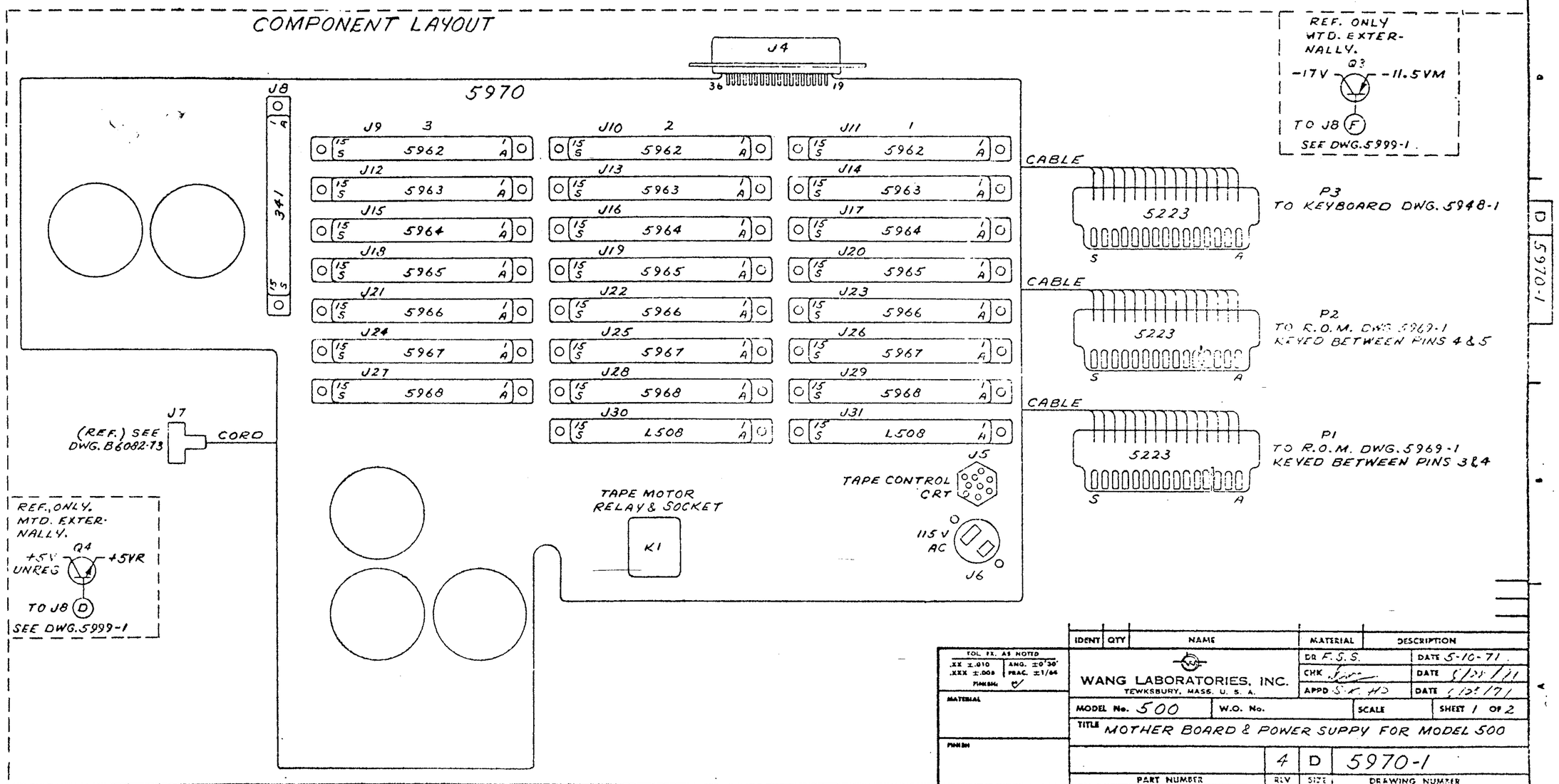


| NO. | REVISION | BY | DATE |
|---|---|---|---|
| 1 | REVISED PER E.C. #2232 APP'D. R.T. | E.G. | 2/15 |
| 2 | REVISED PER E.C. #2325 APP'D. J.M. | T.E.G. | 7/15 |
| 3 | REVISED PER E.C. #2423 APP'D. J.M. | T.E.G. | 9/15 |
| 4 | REVISED PER E.C. #2563 APP'D. J.M. | T.E.G. | 11/15 |

FOL. FR. AS NOTED
.XX ±.010 ANG. ±0°30'
.XXX ±.005 FRAC. ±1/64
FINISH: ✓
MATERIAL
FINISH

WANG LABORATORIES, INC.
TEWKSBURY, MASS. U.S.A.

| IDENT | QTY | NAME | MATERIAL | DESCRIPTION |
|---|---|---|---|---|
| | | | DR F.S.S. | DATE 5-10-71 |
| | | | CHK [illegible] | DATE 5/25/71 |
| | | | APPD S.A. HD | DATE 5/25/71 |

MODEL No. 500 | W.O. No. | SCALE | SHEET 1 OF 2

TITLE MOTHER BOARD & POWER SUPPY FOR MODEL 500

PART NUMBER | REV. 4 | SIZE D | DRAWING NUMBER 5970-1

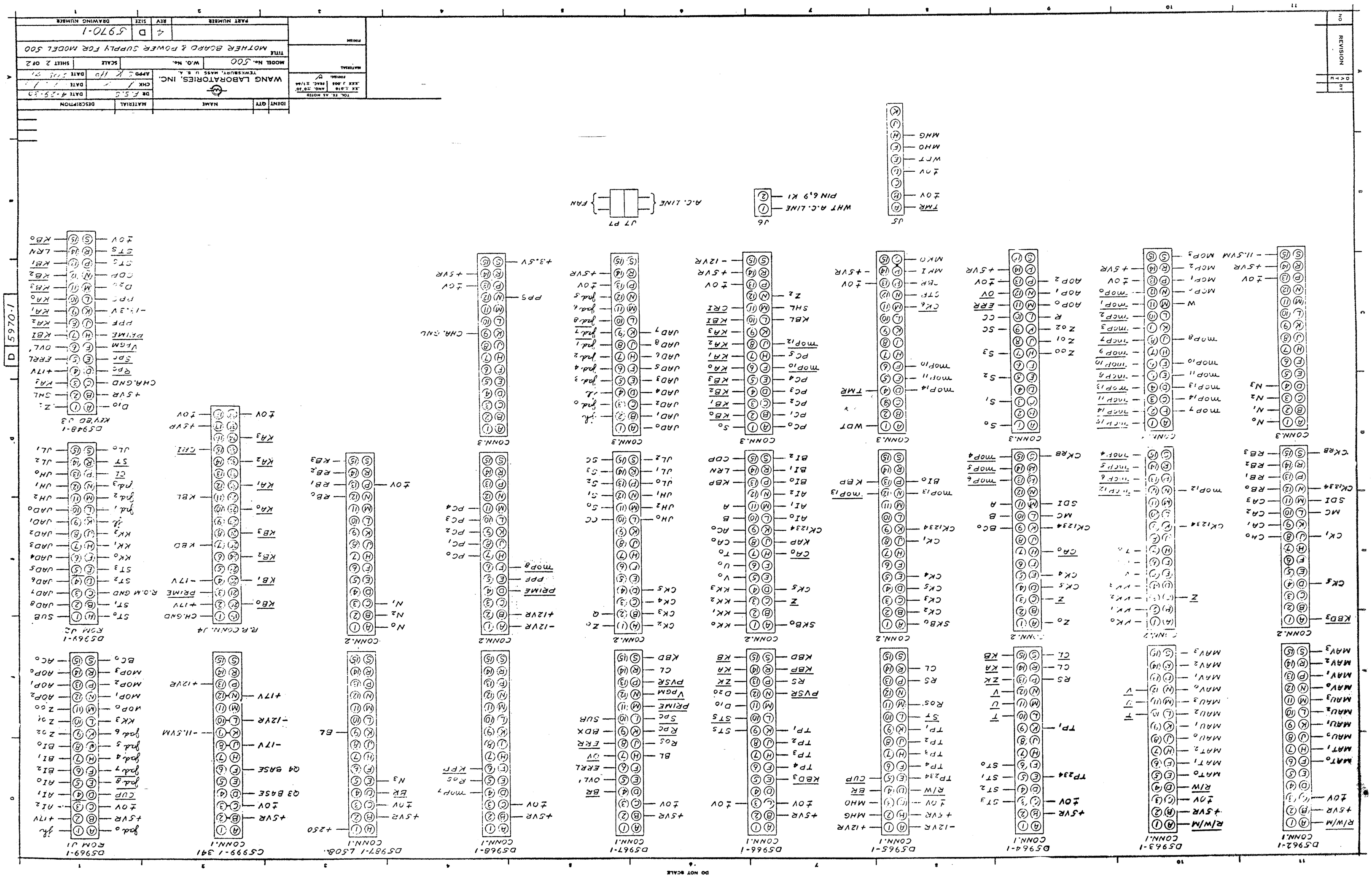


| IDENT | QTY | NAME | MATERIAL | DESCRIPTION |
|---|---|---|---|---|
| | | WANG LABORATORIES, INC. TEWKSBURY, MASS U.S.A. | | |
| | | TOL. FR. AS NOTED .XX ±.010 .XXX ±.005 FINISH: | ANG. ±0°30' BREAK ±1/64 | MATERIAL |
| | | DR F.S.S. | DATE 4-29-70 | |
| | | CHK | DATE | |
| | | APPD | DATE | |

MODEL No. 500 W.O. No. SCALE SHEET 2 OF 2

TITLE MOTHER BOARD & POWER SUPPLY FOR MODEL 500

FINISH

| PART NUMBER | REV | SIZE | DRAWING NUMBER |
|---|---|---|---|
| | 4 | D | 5970-1 |

| REVISION | | |
|---|---|---|
| | BY | DATE |
| NO | | |

D 5970-1

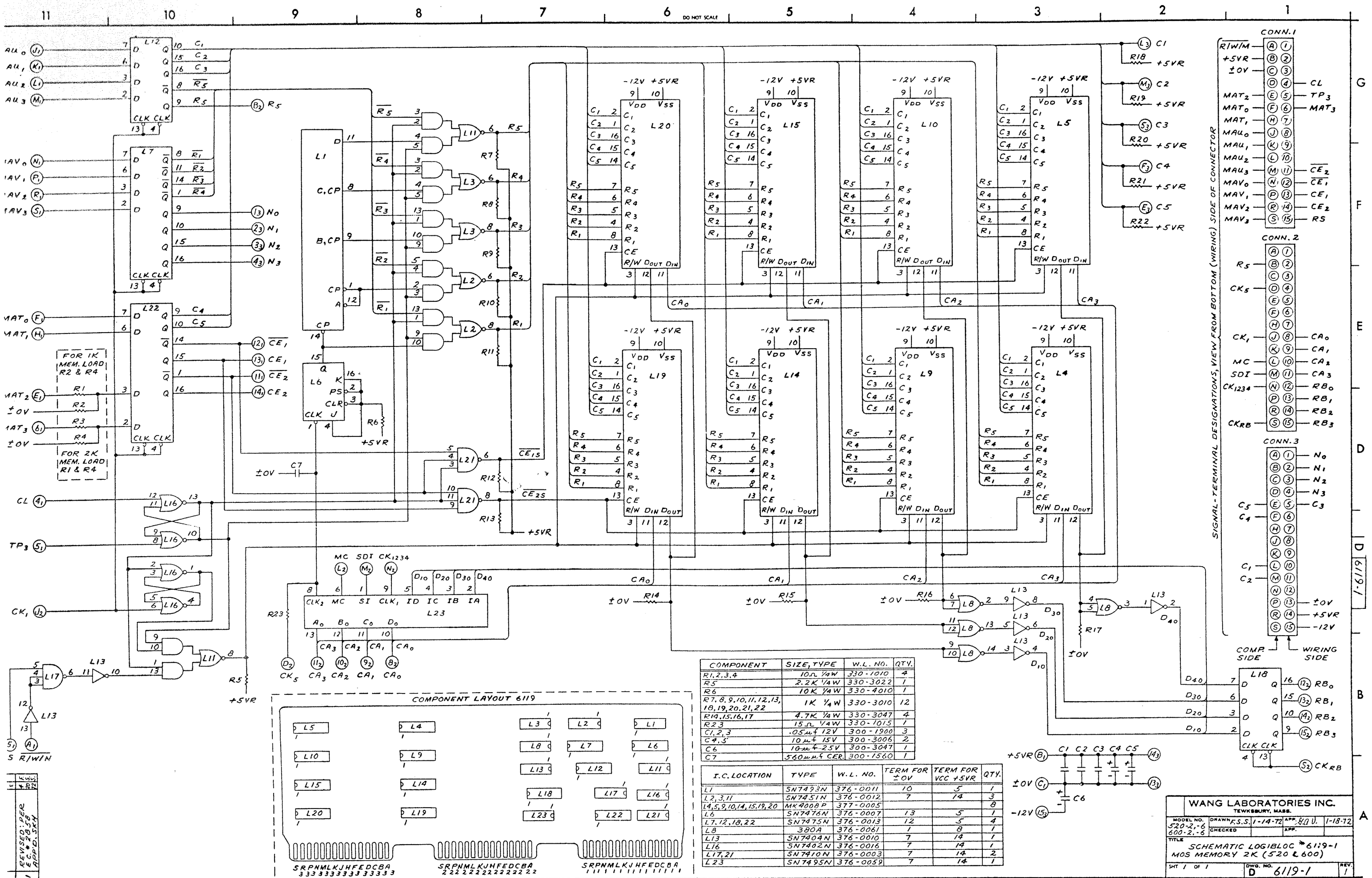


| COMPONENT | SIZE, TYPE | W.L. NO. | QTY. |
|---|---|---|---|
| R1,2,3,4 | 10Ω ¼W | 330-1010 | 4 |
| R5 | 2.2K ¼W | 330-3022 | 1 |
| R6 | 10K ¼W | 330-4010 | 1 |
| R7,8,9,10,11,12,13, 18,19,20,21,22 | 1K ¼W | 330-3010 | 12 |
| R14,15,16,17 | 4.7K ¼W | 330-3047 | 4 |
| R23 | 15Ω ¼W | 330-1015 | 1 |
| C1,2,3 | .05μf 12V | 300-1900 | 3 |
| C4,5 | 10μf 15V | 300-3006 | 2 |
| C6 | 10μf 25V | 300-3047 | 1 |
| C7 | 560μμf CER. | 300-1560 | 1 |

| I.C. LOCATION | TYPE | W.L. NO. | TERM FOR ±0V | TERM FOR VCC +5VR | QTY. |
|---|---|---|---|---|---|
| L1 | SN7493N | 376-0011 | 10 | 5 | 1 |
| L2,3,11 | SN7451N | 376-0012 | 7 | 14 | 3 |
| L4,5,9,10,14,15,19,20 | MK4008P | 377-0005 | | | 8 |
| L6 | SN7476N | 376-0007 | 13 | 5 | 1 |
| L7,12,18,22 | SN7475N | 376-0013 | 12 | 5 | 4 |
| L8 | 380A | 376-0061 | 1 | 8 | 1 |
| L13 | SN7404N | 376-0010 | 7 | 14 | 1 |
| L16 | SN7402N | 376-0016 | 7 | 14 | 1 |
| L17,21 | SN7410N | 376-0003 | 7 | 14 | 2 |
| L23 | SN7495N | 376-0059 | 7 | 14 | 1 |

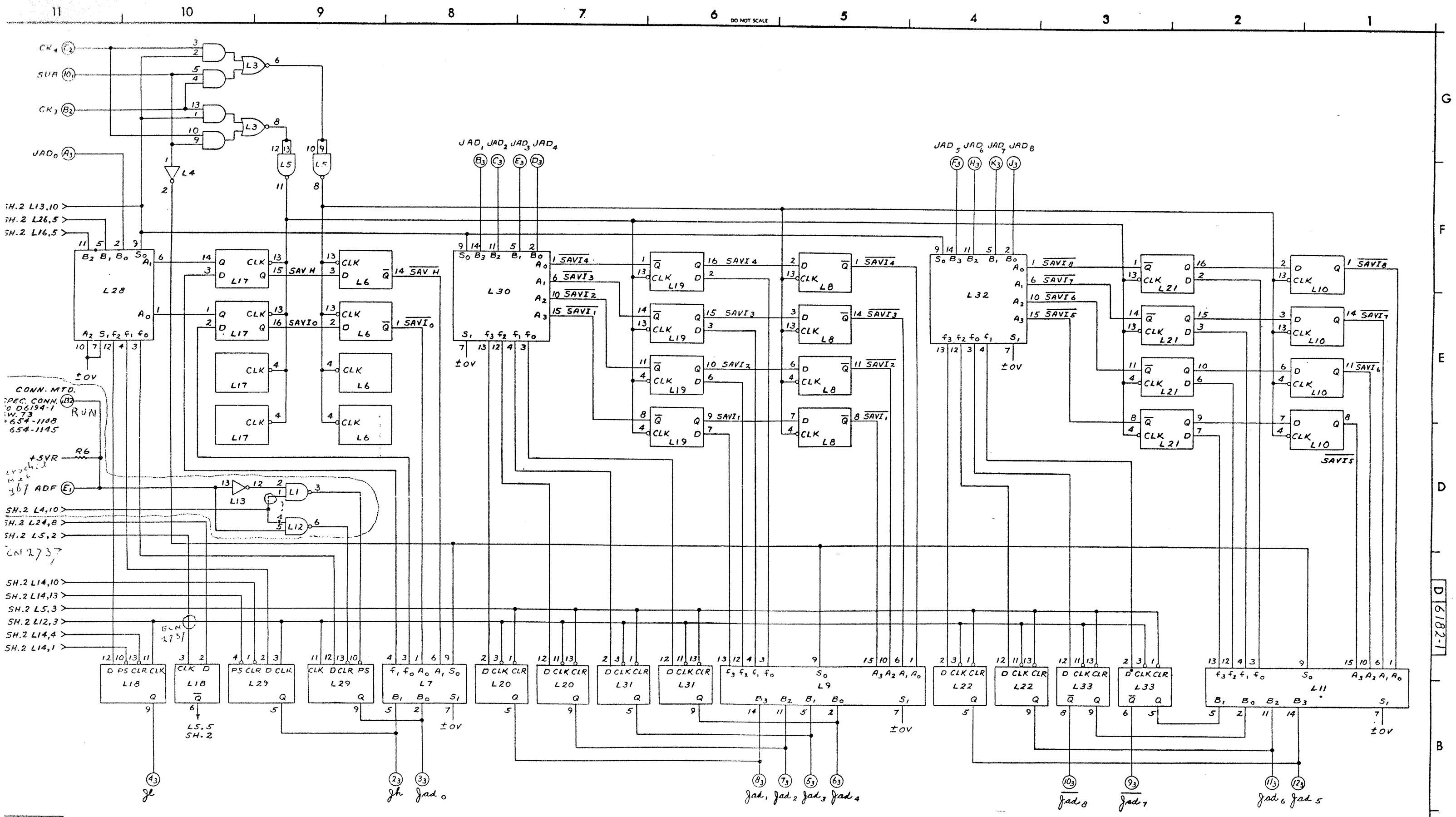


| REV | | | |
|---|---|---|---|
| 1 | REVISED: PER ECN 2737 ADD'D. 37 K HO | 2-16-72 | 2-16-72 |
| 2 | REVISED: PER ECN 3762 ADD'D. SAVIS | 8-16-72 | 8-16-72 |

WANG LABORATORIES INC.
TEWKSBURY, MASS.

| MODEL NO. | DRAWN | CHECKED | APP. | APP. |
|---|---|---|---|---|
| 520 | F.S.S. 11-12-71 | | | 2-18-72 |

TITLE: SCHEMATIC LOGIBLOC #6182-1 ROM ADDRESS

SHT 1 OF 2 | DWG. NO. D 6182-1 | REV 2

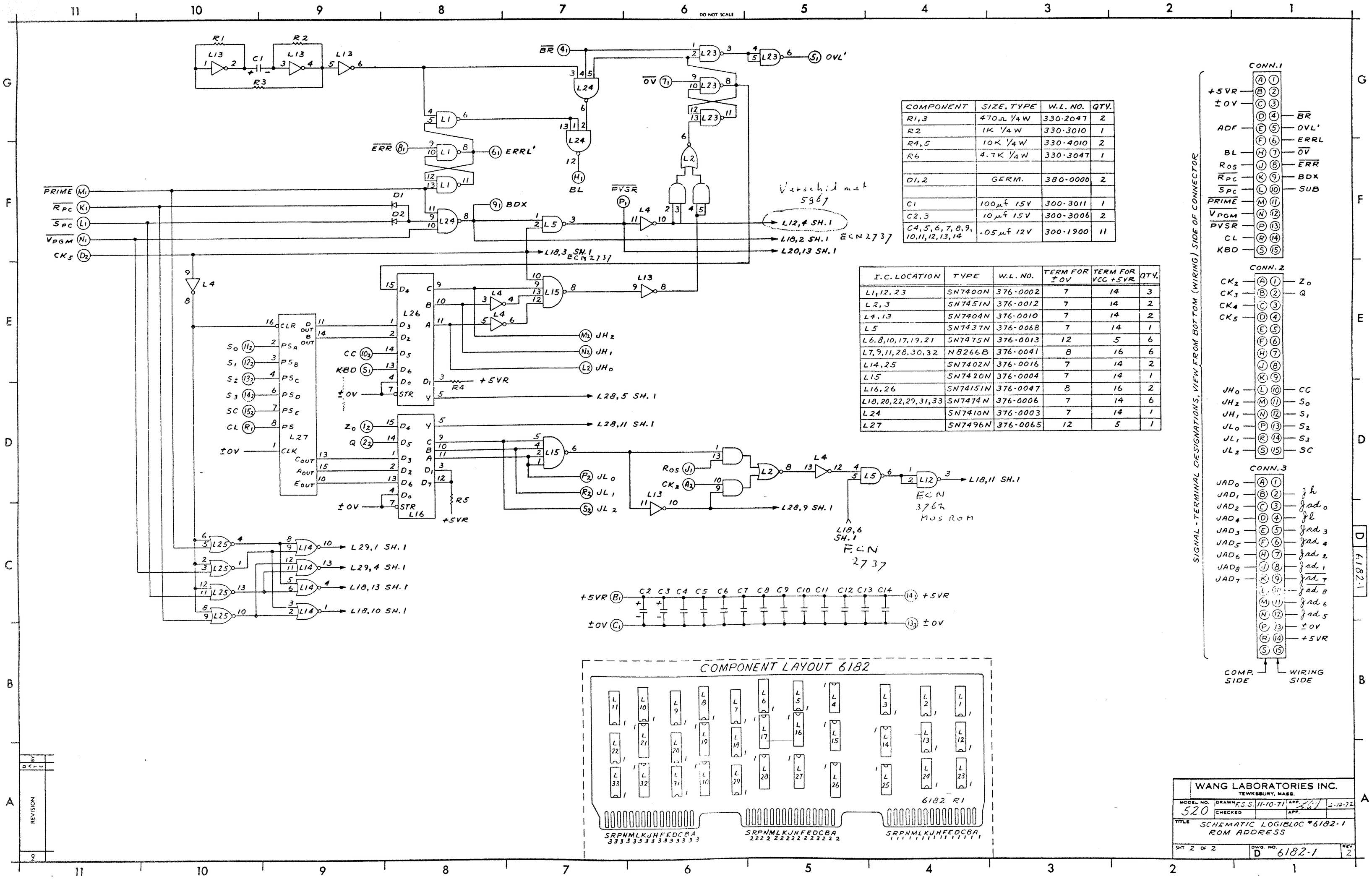


| COMPONENT | SIZE, TYPE | W.L. NO. | QTY. |
|---|---|---|---|
| R1,3 | 470Ω 1/4 W | 330-2047 | 2 |
| R2 | 1K 1/4 W | 330-3010 | 1 |
| R4,5 | 10K 1/4 W | 330-4010 | 2 |
| R6 | 4.7K 1/4 W | 330-3047 | 1 |
| | | | |
| D1,2 | GERM. | 380-0000 | 2 |
| | | | |
| C1 | 100μf 15V | 300-3011 | 1 |
| C2,3 | 10μf 15V | 300-3006 | 2 |
| C4,5,6,7,8,9,10,11,12,13,14 | .05μf 12V | 300-1900 | 11 |

| I.C. LOCATION | TYPE | W.L. NO. | TERM FOR ±OV | TERM FOR VCC +5VR | QTY. |
|---|---|---|---|---|---|
| L1,12,23 | SN7400N | 376-0002 | 7 | 14 | 3 |
| L2,3 | SN7451N | 376-0012 | 7 | 14 | 2 |
| L4,13 | SN7404N | 376-0010 | 7 | 14 | 2 |
| L5 | SN7437N | 376-0068 | 7 | 14 | 1 |
| L6,8,10,17,19,21 | SN7475N | 376-0013 | 12 | 5 | 6 |
| L7,9,11,28,30,32 | N8266B | 376-0041 | 8 | 16 | 6 |
| L14,25 | SN7402N | 376-0016 | 7 | 14 | 2 |
| L15 | SN7420N | 376-0004 | 7 | 14 | 1 |
| L16,26 | SN74151N | 376-0047 | 8 | 16 | 2 |
| L18,20,22,29,31,33 | SN7474N | 376-0006 | 7 | 14 | 6 |
| L24 | SN7410N | 376-0003 | 7 | 14 | 1 |
| L27 | SN7496N | 376-0065 | 12 | 5 | 1 |

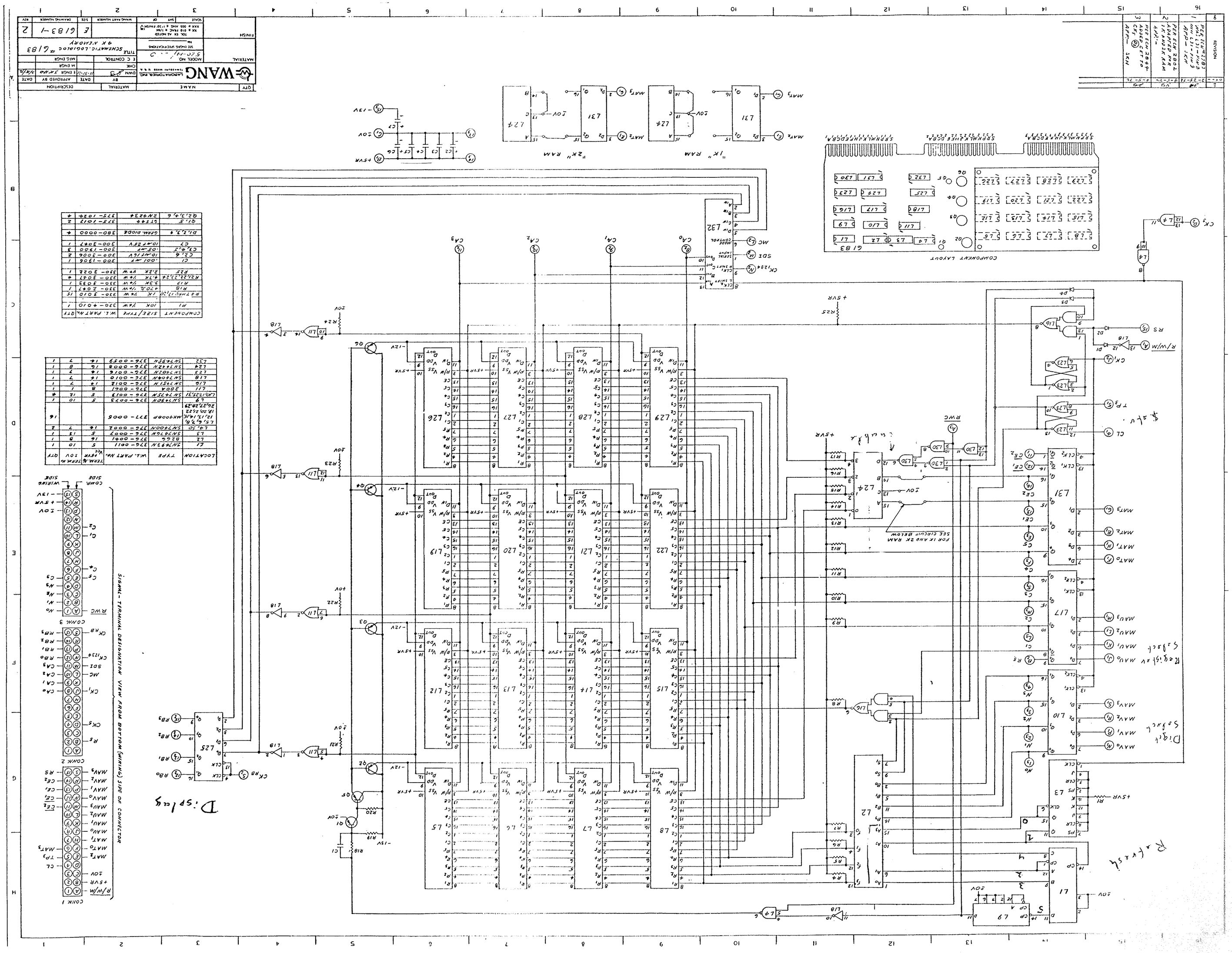
WANG
SCHEMATIC, LOGIC BOARD
6183
COMPONENT LAYOUT
"1K" RAM
"2K" RAM
SIGNAL-TERMINAL DESIGNATION VIEW FROM BOTTOM (WIRING) SIDE OF CONNECTOR
D. Spots
Data Bus
Address Bus
Clock

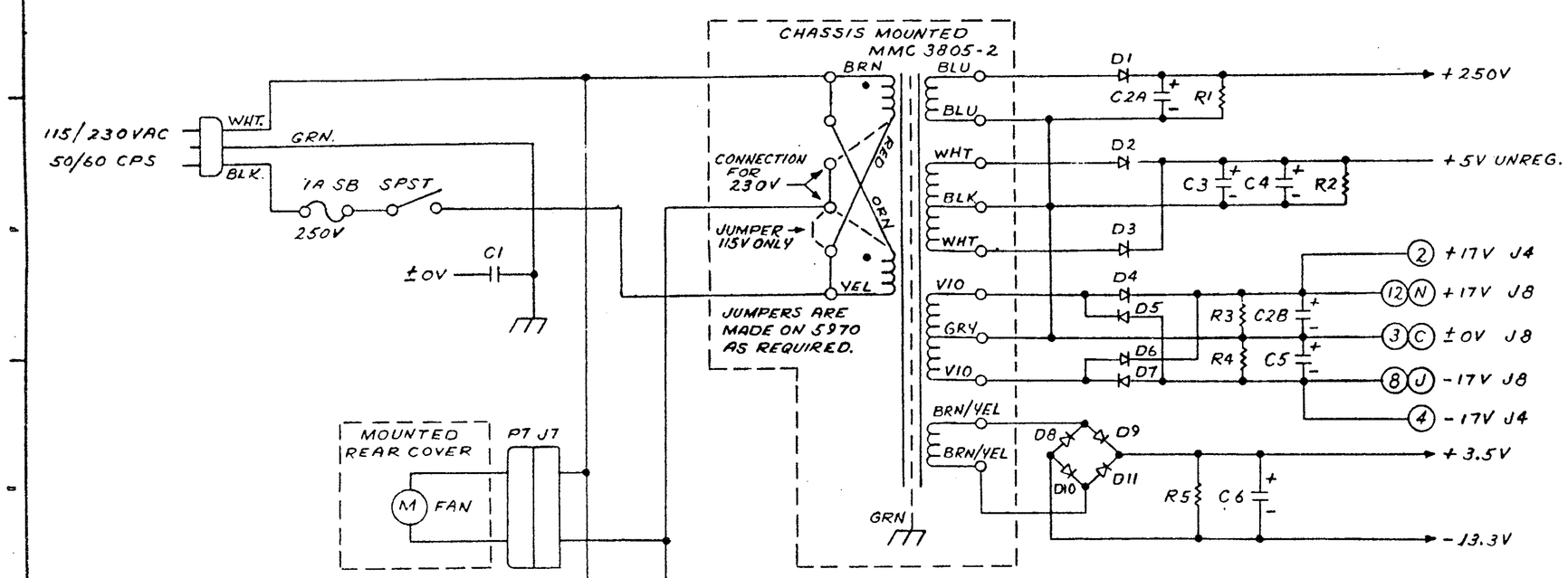


| COMPONENT | SIZE, TYPE | W.L. NO. | QTY |
|---|---|---|---|
| R1 | 270K 1/2W | 331-5027 | 1 |
| R2,3,4,5 | 10K 1/4W | 330-4010 | 4 |
| R6 | 820Ω 1W | 332-2082 | 1 |
| R7 | 5.6K 1W | 332-3056 | 1 |
| R8 | 47Ω 1/2W | 331-1047 | 1 |
| R9 | 100Ω 1/4W | 330-2010 | 1 |
| R10 | 82Ω 1W | 332-1082 | 1 |
| | | | |
| C1 | .47/400 VDC | 300-2347 | 1 |
| C2A | 30/350 VDC | 300-3018 | 1 |
| C2B | 3000/20VDC | | |
| C3,4 | 14000/12 VDC | 300-3045 | 2 |
| C5,6 | 6000/20VDC | 300-3019 | 2 |
| C7 | 500/25 VDC | 300-3021 | 1 |
| C8 | .1μf 600 VDC | 300-2410 | 1 |
| D1 | 1N3255 | 380-3001 | 1 |
| D2,3,4,5,6,7,8,9,10,11 | 1N4719 | 380-3002 | 10 |
| D12,13 | EM403 | 380-4000 | 2 |
| | | | |
| K1 | SIGMA TOR2-12 DCSCO | 320-0045 | 1 |

| PART | SIZE, TYPE | W.L. NO. | QTY. |
|---|---|---|---|
| SOCKET | K1, AD-67 | 341-0019 | 1 |
| | | | |
| P1,2,3 | 5223 | 510-5223 | 3 |
| | | | |
| J4 | 57-40360 AMP. | 350-1038 | 1 |
| J5 | 126-221 AMP. | 350-1003 | 1 |
| J6 | 302-AB CINCH JONES | 654-1110 | 1 |
| J7 | 16415 ROTRON CORD | 420-1005 | 1 |
| J8 TO J31 | 225-21521-110 AMP. | 350-0011 | 24 |
| | | | |
| RIVETS, J6 | 1/8 DIA. x 3/16 LG., POP | 651-0401 | 2 |

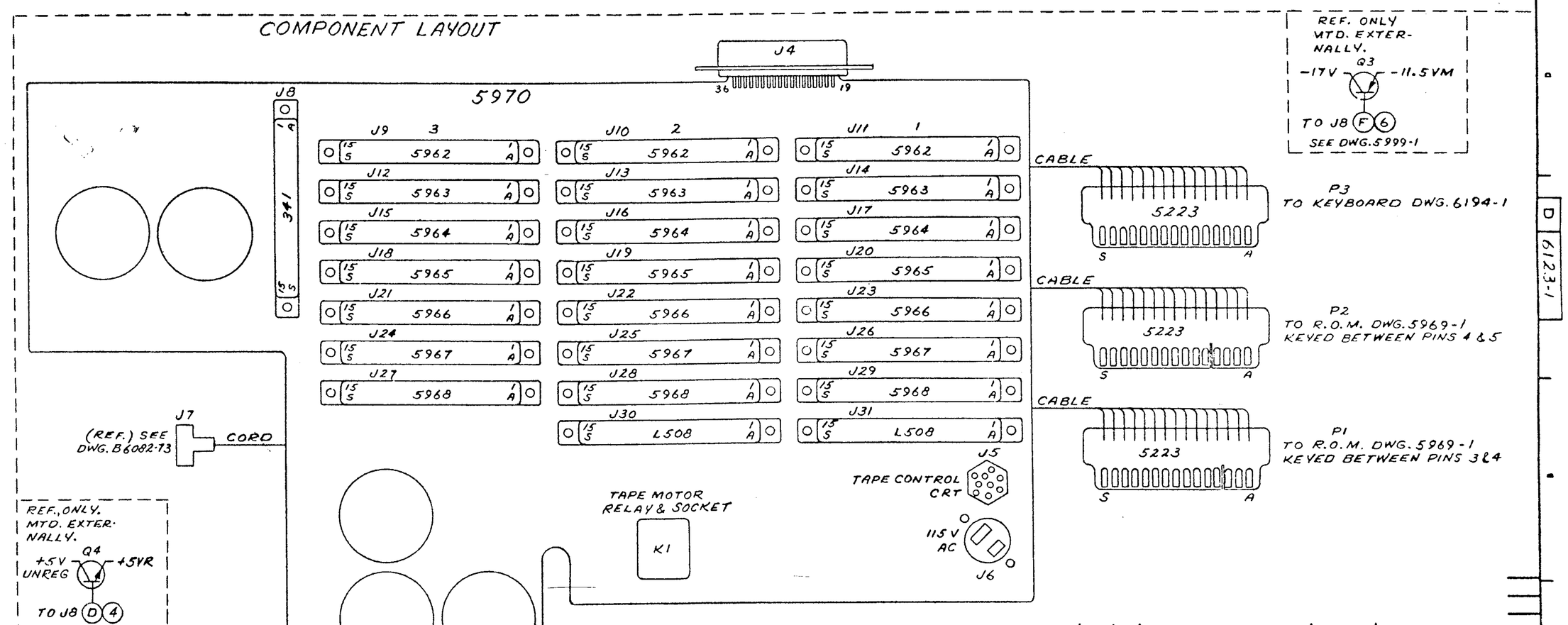


| NO. | REVISION | BY | DATE |
|---|---|---|---|
| 1 | REVISED PER E.C. #3063 ADD'D TAP | F.S. | 2-7-72 |
| 2 | REVISED PER E.C. #3370 ADD'D TAPE CONT. | F.S. | 2-22-72 |
| 3 | REVISED PER E.C. #5632 ADD'D SKM | RB | 11-1-73 |

TOL. EX. AS NOTED
.XX ±.010 ANG. ±0°30'
.XXX ±.005 FRAC. ±1/64
FINISH
MATERIAL
FINISH

| IDENT | QTY | NAME | MATERIAL | DESCRIPTION |
|---|---|---|---|---|
| | | | DR F.S.S. | DATE 2-10-72 |
| | | | CHK K.S.L. | DATE 2-1-72 |
| | | | APPD | DATE |

WANG LABORATORIES, INC.
TEWKSBURY, MASS. U. S. A.

MODEL No. 500/520 W.O. No. SCALE SHEET 1 OF 2

TITLE MOTHER BOARD & POWER SUPPY FOR MOD. 500/520

| PART NUMBER | REV | SIZE | DRAWING NUMBER |
|---|---|---|---|
| | 3 | D | 6123-1 |

D 6123-1

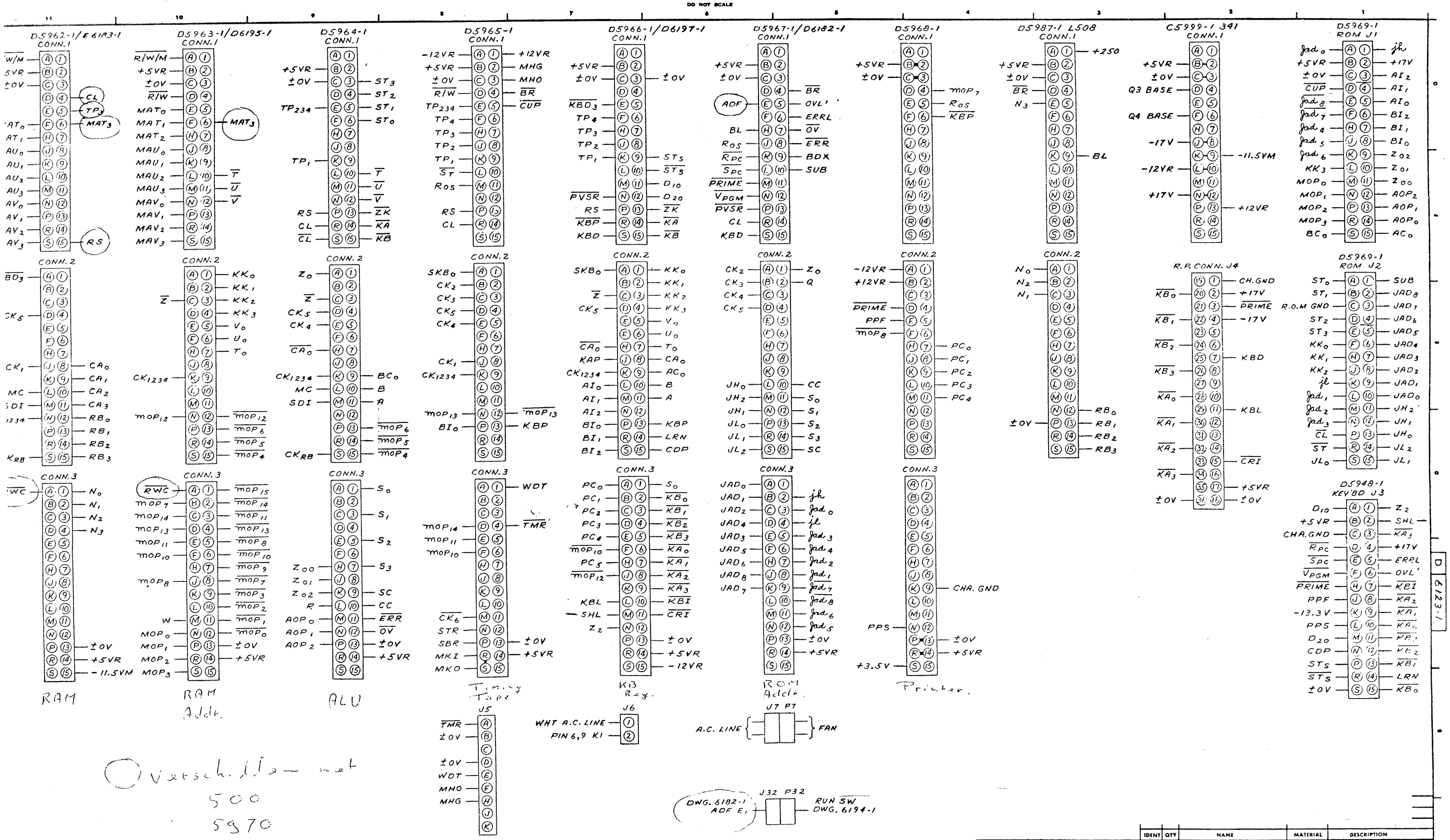


| IDENT | QTY | NAME | MATERIAL | DESCRIPTION |
|---|---|---|---|---|
| | | | | |

TOL. EX. AS NOTED .XX ±.010 .XXX ±.005 ANG. ±0°30' FRAC. ±1/64 FINISH

MATERIAL

FINISH

WANG LABORATORIES, INC. TEWKSBURY, MASS. U.S.A.

DR F.S.S DATE 2-10-72
CHK DATE 5-1-72
APPD DATE

MODEL No. 500/520 W.O. No. SCALE SHEET 2 OF 2

TITLE MOTHER BOARD & POWER SUPPLY FOR MOD. 500/520

| PART NUMBER | REV | SIZE | DRAWING NUMBER |
|---|---|---|---|
| | | D | 6123-1 |

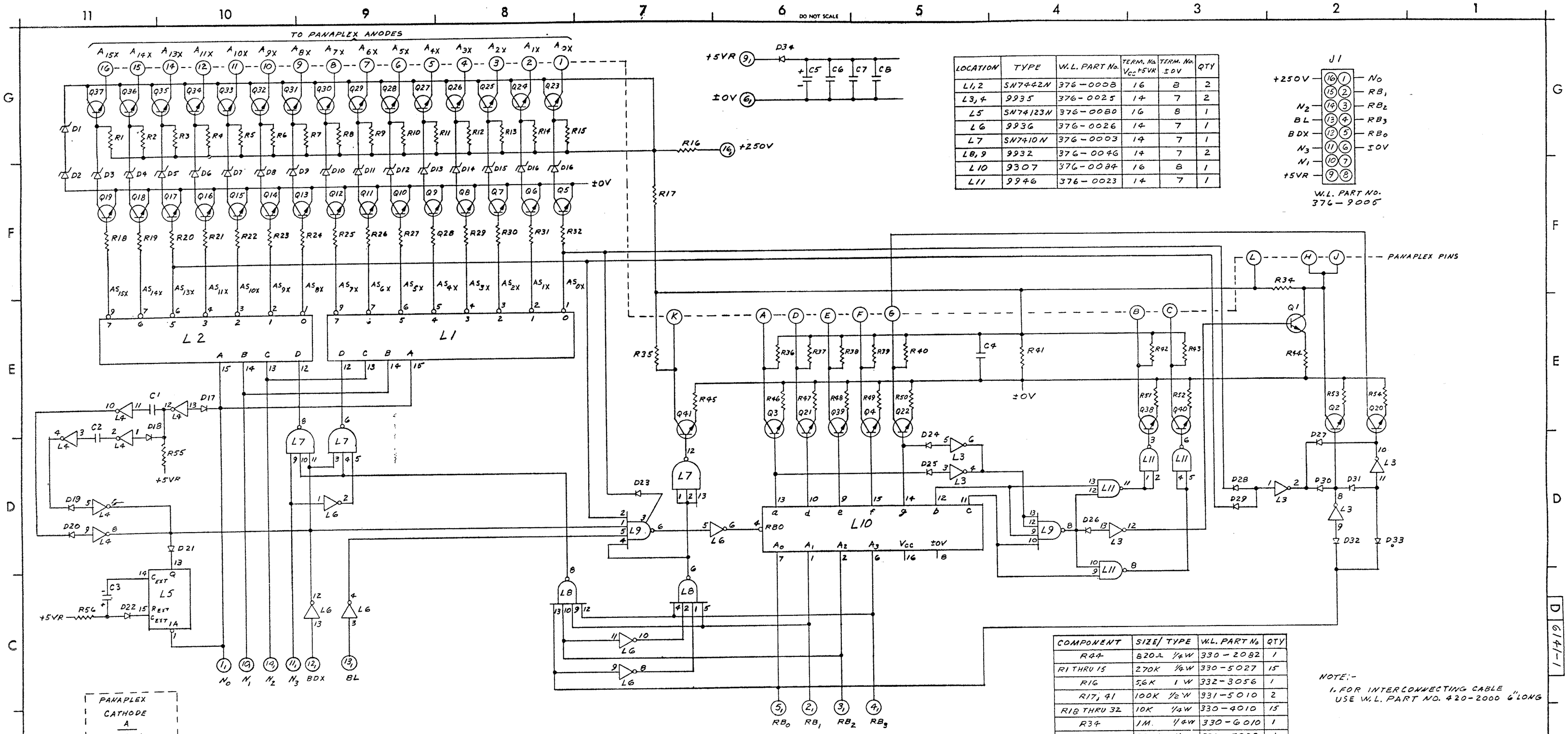


| LOCATION | TYPE | W.L. PART No. | TERM. No. $V_{CC}$ +5VR | TERM. No. ±0V | QTY |
|---|---|---|---|---|---|
| L1,2 | SN7442N | 376-0008 | 16 | 8 | 2 |
| L3,4 | 9935 | 376-0025 | 14 | 7 | 2 |
| L5 | SN74123N | 376-0080 | 16 | 8 | 1 |
| L6 | 9936 | 376-0026 | 14 | 7 | 1 |
| L7 | SN7410N | 376-0003 | 14 | 7 | 1 |
| L8,9 | 9932 | 376-0046 | 14 | 7 | 2 |
| L10 | 9307 | 376-0084 | 16 | 8 | 1 |
| L11 | 9946 | 376-0023 | 14 | 7 | 1 |

J1
W.L. PART NO. 376-9005

| COMPONENT | SIZE/ TYPE | W.L. PART No | QTY |
|---|---|---|---|
| R44 | 820Ω ¼W | 330-2082 | 1 |
| R1 THRU 15 | 270K ¼W | 330-5027 | 15 |
| R16 | 5.6K 1 W | 332-3056 | 1 |
| R17, 41 | 100K ½W | 331-5010 | 2 |
| R18 THRU 32 | 10K ¼W | 330-4010 | 15 |
| R34 | 1M ¼W | 330-6010 | 1 |
| R35 | 220K ¼W | 330-5022 | 1 |
| R36 THRU 40, 92, 93 | 330K ¼W | 330-5033 | 8 |
| | | | |
| R53 | 1K ½W | 330-3010 | 1 |
| R45 THRU 52, 54 | 1.8K ¼W | 330-3018 | 9 |
| R55 | 470Ω ½W | 330-2047 | 1 |
| R56 | 22K ½W | 330-4022 | 1 |
| Q1 THRU 41 | DRIVER SIL. TRANS. | 375-1006 | 41 |
| C1, 2 | .01 μF CER. | 300-1903 | 2 |
| C3 | 1 μF TANT. | 300-4000 | 1 |
| C4 | .0056 μF 200V | 300-1915 | 1 |
| C5 | 10 μF 16VDC | 300-3006 | 1 |
| C6, 7, 8 | .01 μF | 300-1903 | 3 |
| D1 THRU 16 | ZENER 110V | 380-2125 | 16 |
| D17, 18, 19, 20, 22, 23, 24, 25, 26, 28, 29, 31, 32, 33 | SIL. DIODE | 380-1001 | 14 |
| D21, 27, 30 | GER. DIODE | 380-0000 | 3 |
| D34 | EM 403 | 380-4000 | 1 |

NOTE:-
1. FOR INTERCONNECTING CABLE USE W.L. PART NO. 420-2000 6" LONG

| REVISION | | |
|---|---|---|
| 1 | PER ECN 3064 C1,2 WAS .05 μF APP'D. SKH | 6/27/72 |

WANG LABORATORIES INC.
TEWKSBURY, MASS.

MODEL NO. 600 | DRAWN 12/18/71 | APP. SKH 3/31/72 | CHECKED | APP.

TITLE SCHEMATIC, LOGIBLOC #6141 PANAPLEX DISPLAY

SHT OF | DWG. NO. D 6141-1 | REV. 1